Turkey
Discover
the potential



Savema
Marking and Coding Machines


petek
Savema
Savema
MAKİNALARINA VE KODLAMA MAKİNALARI



Company Profile:

SAVEMA Marking and Coding Ltd.Sti has been founded in 2010 in order to make production of Thermal Transfer Overprinters based on business partners and customer satisfaction all over the world. Savema is the first and only Turkish company that manufactures thermal transfer overprinters. Electronic, mechanical, software and machine design has being carried out in the company. With an experienced technical team, Savema will continue to be a leader of the most efficient implementations and technological innovations in the marking and coding industry.

Savema has been always given importance to Research and Development, made investments to this field and has the best experts in its team. Savema has been produced high performance, low cost thermal transfer printers and the units are suitable for all intermittent and continuous applications within the food, pharmaceutical cosmetics and automobile spare parts industries has the capability to code all kinds of 1D barcodes and 2D datamatrix codes.

Vision:

To be the company that best understands and satisfies the customer requests on marking and coding business and supply best quality products for the needs. By adopting a continuous improvement and high quality service so that has become a leader and a permanent company in the industry.

Mission:

According to the needs of our customers to produce machines that gives the highest level of satisfaction, and minimum maintenance and support.

Quality Policy:

- Always working with customer-oriented.
- Producing printers with maximum performance but less maintenance.
- Provide fast and effective after sales support.
- Keeping always stock available.
- As a final stage, get maximum customer satisfaction.













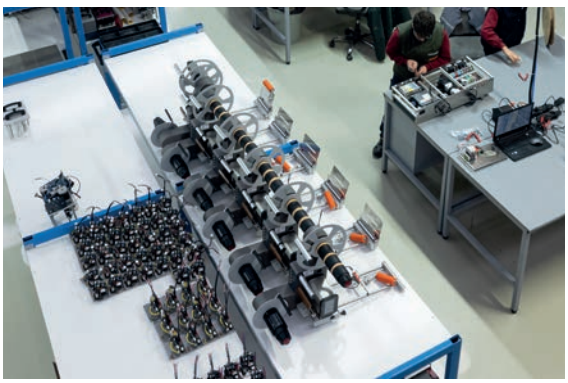



32*40 I
53*40 I
Magnetic

Common Specifications for All Printers

Software: SAYASIS Template Design (Date and Time, Custom Formatted Date and Time, Text, Text Block, Merge Fields, Database Support, Counter, Logo, 1D / 2D Barcodes, GS-1 Barcodes, Table Crea tion Support and User-Friendly Interface) Windows Driver Support, Nicelabel Software support, Code soft Software Support, Emulator Support, Printer Management with SPPL (Savema Protocol) Commands, Printer Control with Remote Control)
Barcodes: 1D Barcodes (EAN-13, EAN-8, CODE 128, CODE 39, CODABAR, ITF 2of5, ITF 14, UPC-A,UPC-E ...), 2D Barcodes (Datamatrix, QR Code, PDF417, Aztec code...), GS-1 Barcodes (GS1-128, GS1-Datamatrix, GS1-Databar Barcodes)
Resolution: 300dpi (12 dots/mm) horizontally and vertically
Operating Temperature: 1 °C - 55 °C (34°F-131°F)
Memory: Max. 5000 Template Storage Capacity, 1GB Internal Memory, Up to 16GB SD Memory Card Support, Up to 32GB USB Memory Support

Specifications	32*40 I (Intermittent)	53*40 I (Intermittent)
Print Area	32mm x 40mm	53mm x 40mm
Print Speed	50 - 300 mm/sec	
Production	Max. 100 prints/min.	
Ribbon Widths & Length	22mm, 35 mm (0,9" - 1,4") & 600 meters (656yards) loaded ribbon (max outer dia 75mm)	35mm, 55 mm (1,4" - 2,2") & 600 meters (656yards) loaded ribbon (max outer dia 75mm)
Power Supply	100/240V 50/60 Hz	
Air Supply (Bar)	Magnetic / Don't Need Air	
Input/Outputs	Print signal / Fault signal, Busy signal.	
Output Messages	Update Error, Contact Error, Ribbon Break / Not Found Error, Remaining Ribbon Quantity, Number of Printed Templates, Number of Prints per Minute	
Connection Types	Relay(NPN, PNP) - Photocell (NPN, PNP)	
Communications	RS-232, Ethernet, USB	
Ribbon Save Modes	Vertical & Horizontal Ribbon Save Modes	
Advanced Control	4.3" Touch Screen Control, Template Changing while Running, Print Position Adjustment, Contrast, Print Delay, Templa-te-Specific Adjustment, Internal Contact Signal, Multi-print Contact Signal, Template Shifting, Template Rotation	
Operator Interface	4.3" 272x480 Pixels Resolution, Full-color display, Password protection on menus, Multi-language(20) support	
Weight (Printer)	5,6 Kg.	5,8 Kg.
Dimensions	175mm H x 190mm W x 197mm D	175mm H x 190mm W x 210mm D

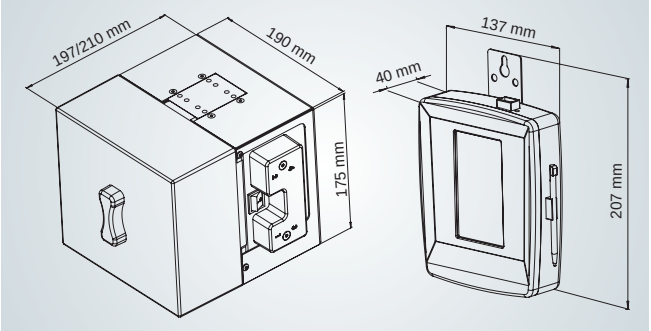

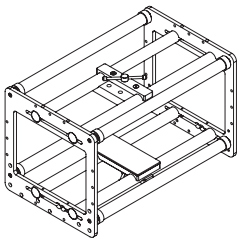

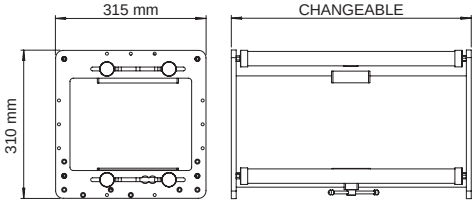

SAVEMA 20 i&c&tr SERIES THERMAL TRANSFER OVERPRINTERS

32*50 I
53*50 I
32 C



Common Specifications for All Printers

Software: SAYASIS Template Design (Date and Time, Custom Formatted Date and Time, Text, Text Block, Merge Fields, Database Support, Counter, Logo, 1D / 2D Barcodes, GS-1 Barcodes, Table Crea tion Support and User-Friendly Interface) Windows Driver Support, Nicelabel Software support, Code soft Software Support, Emulator Support, Printer Management with SPPL (Savema Protocol) Commands, Printer Control with Remote Control)
Barcodes: 1D Barcodes (EAN-13, EAN-8, CODE 128, CODE 39, CODABAR, ITF 2of5, ITF 14, UPC-A,UPC-E ...), 2D Barcodes (Datamatrix, QR Code, PDF417, Aztec code...), GS-1 Barcodes (GS1-128, GS1-Datamatrix, GS1-Databar Barcodes)
Resolution: 300dpi (12 dots/mm) horizontally and vertically
Operating Temperature: 1 °C - 55 °C (34°F-131°F)
Memory: Max. 5000 Template Storage Capacity, 1GB Internal Memory, Up to 16GB SD Memory Card Support, Up to 32GB USB Memory Support

Specifications	32*50 I (Intermittent)	53*50 I (Intermittent)	32 C (Continuous)
Print Area	32 mm x 50 mm	53 mm x 50 mm	32 mm x 125 mm
Print Speed	50 - 400 mm/sec	50 - 400 mm/sec	10 - 550 mm/sec
Production	Max. 320 prints/min		Max. 500 prints/min
Ribbon Widths & Length	22mm, 35 mm (0,9" - 1,4") & 600 meters (656yards) loaded ribbon	35mm, 55 mm (1,4" - 2,2") & 600 meters (656yards) loaded ribbon	22mm, 35 mm (0,9" - 1,4") & 600 meters (656yards) loaded ribbon
Power Supply	100-240V 50-60 Hz		
Air Supply (Bar)	Min. 1 bar - Max. 4 bar		
Input/Outputs	Print Signal/Fault Signal, Busy Signal		
Output Messages	Update Error, Contact Error, Ribbon Break / Not Found Error, Remaining Ribbon Quantity, Number of Printed Templates, Number of Prints per Minute		Missing Print Error, Encoder Error, Update Error, Contact Error, Ribbon Break / Not Found Error, Remaining Ribbon Quantity, Number of Printed Templates, Number of Prints per Minute
Connection Types	Relay(NPN, PNP) - Photocell(NPN, PNP)		
Communications	RS-232, Ethernet, USB		
Ribbon Save Modes	Vertical and Horizontal Ribbon Save Modes		Vertical Ribbon Save Mode
Advanced Control	4.3" Touch Screen Control, Template Changing while Running, Print Po- sition Adjustment, Contrast, Print Delay, Template-Specific Adjustment, Internal Contact Signal, Multi-print Contact Signal, Template Shifting, Template Rotation		4.3" Touch Screen Control, Template Changing while Running, Contrast, Print Delay, Temp- late-Specific Adjustment, Internal Contact Signal, Multi-print Contact Signal, Template Shifting, Template Rotation
Operator Interface	4.3" 272x480 pixels resolution, Full-color display, Password protection on menus, Multi-language(20) support		
Weight (Printer)	5,6 Kg.	5,8 Kg.	5,1 Kg.
Dimensions	175mm H x 190mm W x 197mm D	175mm H x 190mm W x 210mm D	175mm H x 190mm W x 197mm D

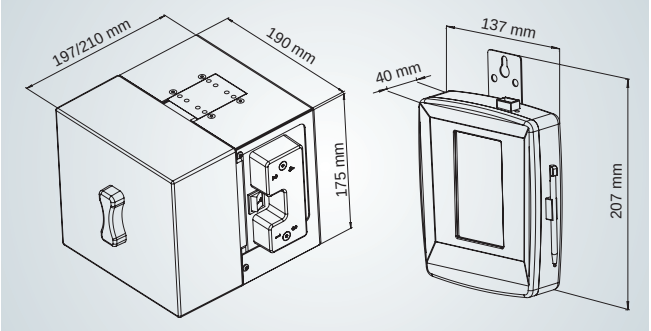

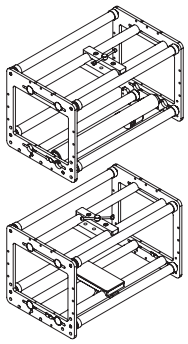

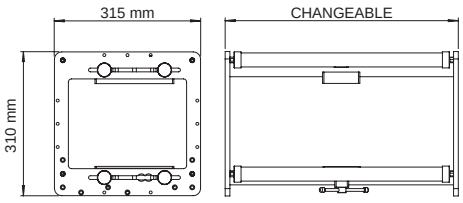

SAVEMA 20 i&c&tr SERIES THERMAL TRANSFER OVERPRINTERS

32*70 I
32 CK



Common Specifications for All Printers

Software: SAYASIS Template Design (Date and Time, Custom Formatted Date and Time, Text, Text Block, Merge Fields, Database Support, Counter, Logo, 1D / 2D Barcodes, GS-1 Barcodes, Table Crea tion Support and User-Friendly Interface) Windows Driver Support, Nicelabel Software support, Code soft Software Support, Emulator Support, Printer Management with SPPL (Savema Protocol) Commands, Printer Control with Remote Control)
Barcodes: 1D Barcodes (EAN-13, EAN-8, CODE 128, CODE 39, CODABAR, ITF 2of5, ITF 14, UPC-A,UPC-E ...), 2D Barcodes (Datamatrix, QR Code, PDF417, Aztec code...), GS-1 Barcodes (GS1-128, GS1-Datamatrix, GS1-Databar Barcodes)
Resolution: 300dpi (12 dots/mm) horizontally and vertically
Operating Temperature: 1 °C - 55 °C (34°F-131°F)
Memory: Max. 5000 Template Storage Capacity, 1GB Internal Memory, Up to 16GB SD Memory Card Support, Up to 32GB USB Memory Support

Specifications	32*70 I (Intermittent)	32 CK (Continuous with Cassette)
Print Area	32 mm x 76 mm	32 mm x 125 mm (Standard) 32 mm x 250 mm (Optional 1) 32 mm x 500 mm (Optional 2)
Print Speed	50 - 500 mm/sec	10 - 1000 mm/sec
Production	Max. 330 prints/min	Max. 500 prints/min
Ribbon Widths & Length	22mm, 35 mm (0,9" - 1,4") & 600 meters (656yards) loaded ribbon	
Power Supply	100-240V 50-60 Hz	
Air Supply (Bar)	Min. 1 bar - Max. 4 bar	
Input/Outputs	Print Signal/Fault Signal, Busy Signal	
Output Messages	Update Error, Contact Error, Ribbon Break / Not Found Error, Remaining Ribbon Quantity, Number of Printed Templates, Number of Prints per Minute	Missing Print Error, Encoder Error, Update Error, Contact Error, Ribbon Break / Not Found Error, Remaining Ribbon Quantity, Number of Printed Templates, Number of Prints per Minute
Connection Types	Relay(NPN, PNP) - Photocell(NPN, PNP)	
Communications	RS-232, Ethernet, USB	
Ribbon Save Modes	Vertical & Horizontal Ribbon Save Modes	Vertical Ribbon Save Mode
Advanced Control	4.3" Touch Screen Control, Template Changing while Running, Print Position Adjustment, Contrast, Print Delay, Template-Specific Adjustment, Internal Contact Signal, Multi-print Contact Signal, Template Shifting, Template Rotation	4.3" Touch Screen Control, Template Changing while Running, Contrast, Print Delay, Template-Specific Adjustment, Internal Contact Signal, Multi-print Contact Signal, Template Shifting, Template Rotation
Operator Interface	4.3" 272x480 Pixels Resolution, Full-color display, Password protection on menus, Multi-language(20) support	
Weight (Printer)	9,4 Kg.	8,9 Kg.
Dimensions	180mm H x 220mm W x 222mm D	

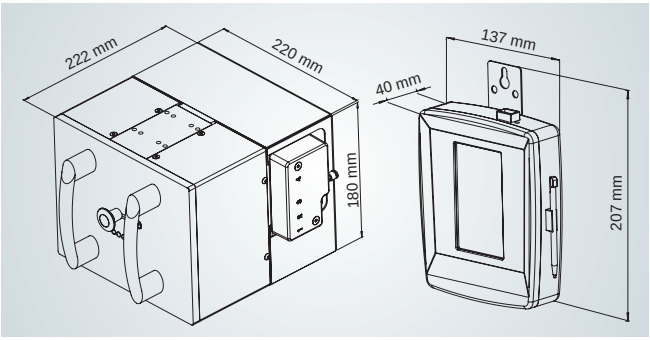

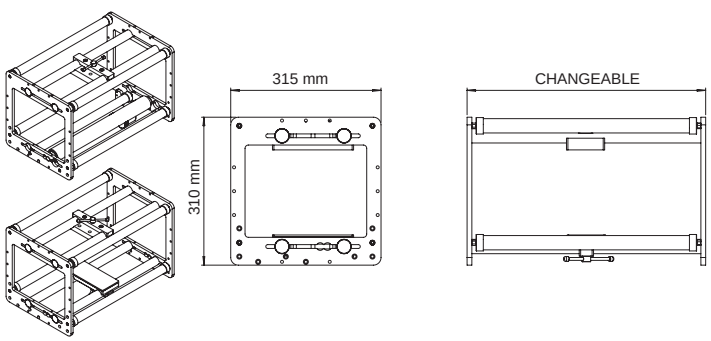

SAVEMA 20 i&c&tr SERIES THERMAL TRANSFER OVERPRINTERS

32*70 I XL
32 CK XL



Common Specifications for All Printers

Software: SAYASIS Template Design (Date and Time, Custom Formatted Date and Time, Text, Text Block, Merge Fields, Database Support, Counter, Logo, 1D / 2D Barcodes, GS-1 Barcodes, Table Crea tion Support and User-Friendly Interface) Windows Driver Support, Nicelabel Software support, Code soft Software Support, Emulator Support, Printer Management with SPPL (Savema Protocol) Commands, Printer Control with Remote Control)
Barcodes: 1D Barcodes (EAN-13, EAN-8, CODE 128, CODE 39, CODABAR, ITF 2of5, ITF 14, UPC-A,UPC-E ...), 2D Barcodes (Datamatrix, QR Code, PDF417, Aztec code...), GS-1 Barcodes (GS1-128, GS1-Datamatrix, GS1-Databar Barcodes)
Resolution: 300dpi (12 dots/mm) horizontally and vertically
Operating Temperature: 1 °C - 55 °C (34°F-131°F)
Memory: Max. 5000 Template Storage Capacity, 1GB Internal Memory, Up to 16GB SD Memory Card Support, Up to 32GB USB Memory Support

Specifications	32*70 I XL (Intermittent)	32 CK XL (Continuous)
Print Area	32 mm x 76 mm	32 mm x 125 mm (Standard) 32 mm x 250 mm (Optional 1) 32 mm x 500 mm (Optional 2)
Print Speed	50 - 500 mm/sec	10 - 800 mm/sec
Production	Max. 330 prints/min	Max. 400 prints/min
Ribbon Widths & Length	22mm, 35 mm (0,9" - 1,4") & 1.000 meters (1.093yards) loaded ribbon	
Power Supply	100-240V 50-60 Hz	
Air Supply (Bar)	Min. 1 bar - Max. 4 bar	
Input/Outputs	Print Signal/Fault Signal, Busy Signal	
Output Messages	Update Error, Contact Error, Ribbon Break / Not Found Error, Remaining Ribbon Quantity, Number of Printed Templates, Number of Prints per Minute	Missing Print Error, Encoder Error, Update Error, Contact Error, Ribbon Break / Not Found Error, Remaining Ribbon Quantity, Number of Printed Templates, Number of Prints per Minute
Connection Types	Relay(NPN, PNP) - Photocell(NPN, PNP)	
Communications	RS-232, Ethernet, USB	
Ribbon Save Modes	Vertical & Horizontal Ribbon Save Modes	Vertical Ribbon Save Mode
Advanced Control	7" Touch Screen Control, Template Changing while Running, Print Position Adjustment, Contrast, Print Delay, Template-Specific Adjustment, Internal Contact Signal, Multi-print Contact Signal, Template Shifting, Template Rotation	7" Touch Screen Control, Template Changing while Running, Contrast, Print Delay, Template-Specific Adjustment, Internal Contact Signal, Multi-print Contact Signal, Template Shifting, Template Rotation
Operator Interface	7" 800x480 Pixels Resolution, Full-color display, Password protection on menus, Multi-language(20) support	
Weight (Printer)	9,4 Kg.	8,9 Kg.
Dimensions	180mm H x 265mm W x 237mm D	

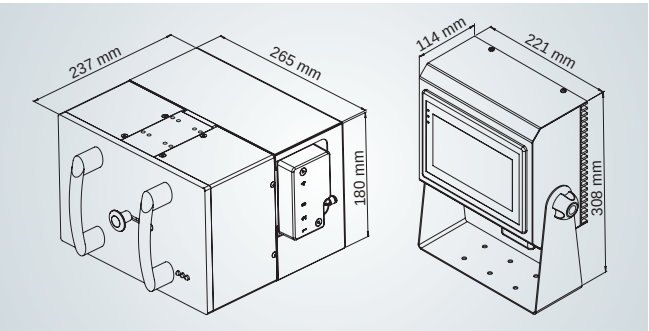

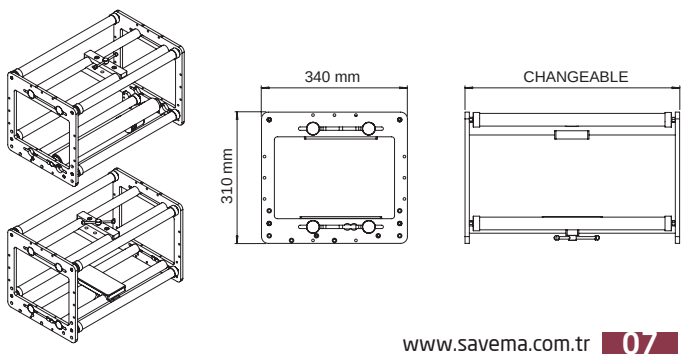

SAVEMA 20 i&c&tr SERIES THERMAL TRANSFER OVERPRINTERS



53*70 I
53*125 I
53 C

Common Specifications for All Printers

Software: SAYASIS Template Design (Date and Time, Custom Formatted Date and Time, Text, Text Block, Merge Fields, Database Support, Counter, Logo, 1D / 2D Barcodes, GS-1 Barcodes, Table Crea tion Support and User-Friendly Interface) Windows Driver Support, Nicelabel Software support, Code soft Software Support, Emulator Support, Printer Management with SPPL (Savema Protocol) Commands, Printer Control with Remote Control)
Barcodes: 1D Barcodes (EAN-13, EAN-8, CODE 128, CODE 39, CODABAR, ITF 2of5, ITF 14, UPC-A,UPC-E ...), 2D Barcodes (Datamatrix, QR Code, PDF417, Aztec code...), GS-1 Barcodes (GS1-128, GS1-Datamatrix, GS1-Databar Barcodes)
Resolution: 300dpi (12 dots/mm) horizontally and vertically
Operating Temperature: 1 °C - 55 °C (34°F-131°F)
Memory: Max. 5000 Template Storage Capacity, 1GB Internal Memory, Up to 16GB SD Memory Card Support, Up to 32GB USB Memory Support

Specifications	53*70 I (Intermittent)	53*125 I (Intermittent)	53 C (Continuous)
Print Area	53 mm x 76 mm	53 mm x 125 mm	53 mm x 125 mm (Standard) 53 mm x 250 mm (Optional 1) 53 mm x 500 mm (Optional 2)
Print Speed	50 - 500 mm/sec	50 - 500 mm/sec	10 - 1000 mm/sec
Production	Max. 330 prints/min		Max. 500 prints/min
Ribbon Widths & Length	35mm, 55 mm (1,4" - 2,2") & 600 meters (656yards) loaded ribbon		
Power Supply	100-240V 50-60 Hz		
Air Supply (Bar)	Min. 1 bar - Max. 4 bar		
Input/Outputs	Print Signal/Fault Signal, Busy Signal		
Output Messages	Update Error, Contact Error, Ribbon Break / Not Found Error, Remaining Ribbon Quantity, Number of Printed Templates, Number of Prints per Minute		Missing Print Error, Encoder Error, Update Error, Contact Error, Ribbon Break / Not Found Error, Remaining Ribbon Quantity, Number of Printed Templates, Number of Prints per Minute
Connection Types	Relay(NPN, PNP) - Photocell(NPN, PNP)		
Communications	RS-232, Ethernet, USB		
Ribbon Save Modes	Vertical & Horizontal Ribbon Save Modes		Vertical Ribbon Save Mode
Advanced Control	7" Touch Screen Control, Template Changing while Running, Print Posi- tion Adjustment, Contrast, Print Delay, Template-Specific Adjustment, Internal Contact Signal, Multi-print Contact Signal, Template Shifting, Template Rotation		7" Touch Screen Control, Template Changing while Running, Contrast, Print Delay, Temp- late-Specific Adjustment, Internal Contact Signal, Multi-print Contact Signal, Template Shifting, Template Rotation
Operator Interface	7" 800x480 Pixels Resolution, Full-color display, Password protection on menus, Multi-language(20) support		
Weight (Printer)	9,4 Kg.	11 Kg.	8,9 Kg.
Dimensions	180mm H x 220mm W x 233mm D	180mm H x 248mm W x 265mm D	180mm H x 220mm W x 233mm D

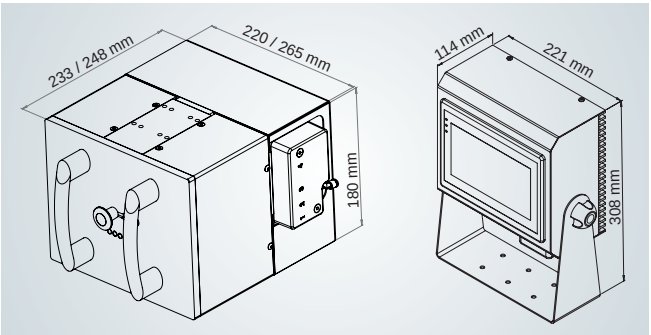

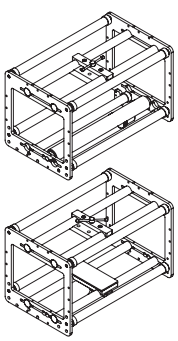

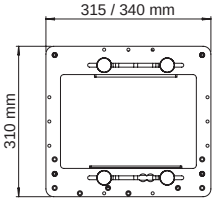

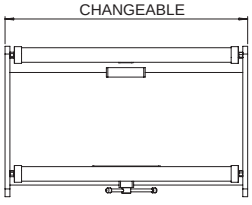

SAVEMA 20 i&c&tr SERIES THERMAL TRANSFER OVERPRINTERS

53*70 I XL
53 C XL



Common Specifications for All Printers

Software: SAYASIS Template Design (Date and Time, Custom Formatted Date and Time, Text, Text Block, Merge Fields, Database Support, Counter, Logo, 1D / 2D Barcodes, GS-1 Barcodes, Table Creation Support and User-Friendly Interface) Windows Driver Support, Nicelabel Software support, Code soft Software Support, Emulator Support, Printer Management with SPPL (Savema Protocol) Commands, Printer Control with Remote Control)
Barcodes: 1D Barcodes (EAN-13, EAN-8, CODE 128, CODE 39, CODABAR, ITF 2of5, ITF 14, UPC-A,UPC-E ...), 2D Barcodes (Datamatrix, QR Code, PDF417, Aztec code...), GS-1 Barcodes (GS1-128, GS1-Datamatrix, GS1-Databar Barcodes)
Resolution: 300dpi (12 dots/mm) horizontally and vertically
Operating Temperature: 1 °C - 55 °C (34°F-131°F)
Memory: Max. 5000 Template Storage Capacity, 1GB Internal Memory, Up to 16GB SD Memory Card Support, Up to 32GB USB Memory Support

Specifications	53*70 I XL (Intermittent)	53 C XL (Continuous)
Print Area	53 mm x 76 mm	53 mm x 125 mm (Standard) 53 mm x 250 mm (Optional 1) 53 mm x 500 mm (Optional 2)
Print Speed	50 - 500 mm/sec	10 - 800 mm/sec
Production	Max. 330 prints/min	Max. 500 prints/min
Ribbon Widths & Length	35mm, 55 mm (1,4" - 2,2") & 1.000 meters (1.093yards) loaded ribbon	
Power Supply	100-240V 50-60 Hz	
Air Supply (Bar)	Min. 1 bar - Max. 4 bar	
Input/Outputs	Print Signal/Fault Signal, Busy Signal	
Output Messages	Update Error, Contact Error, Ribbon Break / Not Found Error, Remaining Ribbon Quantity, Number of Printed Templates, Number of Prints per Minute	Missing Print Error, Encoder Error, Update Error, Contact Error, Ribbon Break / Not Found Error, Remaining Ribbon Quantity, Number of Printed Templates, Number of Prints per Minute
Connection Types	Relay(NPN, PNP) - Photocell(NPN, PNP)	
Communications	RS-232, Ethernet, USB	
Ribbon Save Modes	Vertical & Horizontal Ribbon Save Modes	Vertical Ribbon Save Mode
Advanced Control	7" Touch Screen Control, Template Changing while Running, Print Position Adjustment, Contrast, Print Delay, Template-Specific Adjustment, Internal Contact Signal, Multi-print Contact Signal, Template Shifting, Template Rotation	7" Touch Screen Control, Template Changing while Running, Contrast, Print Delay, Template-Specific Adjustment, Internal Contact Signal, Multi-print Contact Signal, Template Shifting, Template Rotation
Operator Interface	7" 800x480 Pixels Resolution, Full-color display, Password protection on menus, Multi-language(20) support	
Weight (Printer)	11 Kg.	10,5 Kg.
Dimensions	180mm H x 248mm W x 265mm D	

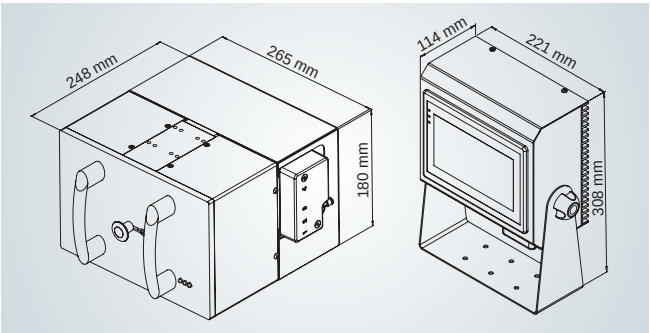

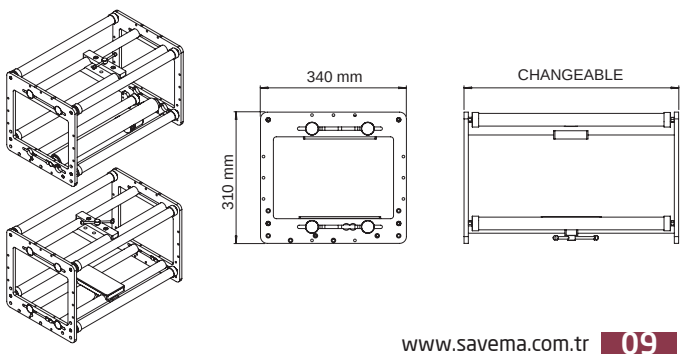

SAVEMA 20 i&c&tr SERIES THERMAL TRANSFER OVERPRINTERS

53*200 I



NEW PRODUCT

Common Specifications for All Printers

Software: SAYASIS Template Design (Date and Time, Custom Formatted Date and Time, Text, Text Block, Merge Fields, Database Support, Counter, Logo, 1D / 2D Barcodes, GS-1 Barcodes, Table Crea tion Support and User-Friendly Interface) Windows Driver Support, Nicelabel Software support, Code soft Software Support, Emulator Support, Printer Management with SPPL (Savema Protocol) Commands, Printer Control with Remote Control)
Barcodes: 1D Barcodes (EAN-13, EAN-8, CODE 128, CODE 39, CODABAR, ITF 2of5, ITF 14, UPC-A,UPC-E ...), 2D Barcodes (Datamatrix, QR Code, PDF417, Aztec code...), GS-1 Barcodes (GS1-128, GS1-Datamatrix, GS1-Databar Barcodes)
Resolution: 300dpi (12 dots/mm) horizontally and vertically
Operating Temperature: 1 °C - 55 °C (34°F-131°F)
Memory: Max. 5000 Template Storage Capacity, 1GB Internal Memory, Up to 16GB SD Memory Card Support, Up to 32GB USB Memory Support

Specifications	53* 200 I (Intermittent)
Print Area	53 mm x 200 mm
Print Speed	50 - 400 mm/sec
Production	Max. 235 prints/min
Ribbon Widths & Length	35mm, 55 mm & 600 meters loaded ribbon
Power Supply	100-240V 50-60 Hz
Air Supply (Bar)	Min. 1 bar - Max. 4 bar
Input/Outputs	Print Signal/Fault Signal, Busy Signal
Output Messages	Update Error, Contact Error, Ribbon Break / Not Found Error, Remaining Ribbon Quantity, Number of Printed Templates, Number of Prints per Minute
Connection Types	Relay(NPN, PNP) - Photocell(NPN, PNP)
Communications	RS-232, Ethernet, USB
Ribbon Save Modes	Vertical & Horizontal Ribbon Save Modes
Advanced Control	7" Touch Screen Control, Template Changing while Running, Print Position Adjustment, Contrast, Print Delay, Templa-te-Specific Adjustment, Internal Contact Signal, Multi-printContact Signal, Template Shifting, Template Rotation
Operator Interface	7" 800x480 Pixels Resolution, Full-color display, Password protection on menus, Multi-language(20) support
Weight (Printer)	12,5 Kg
Dimensions	180mm H x 248mm W x 345 mm D

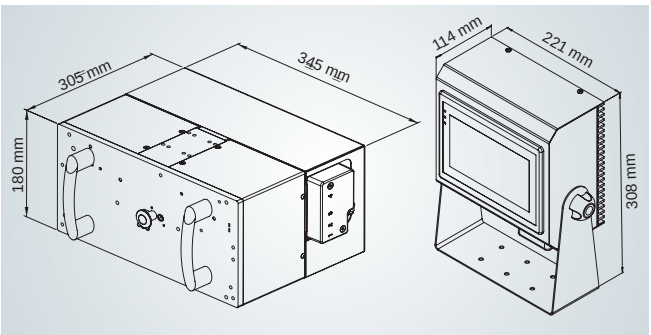

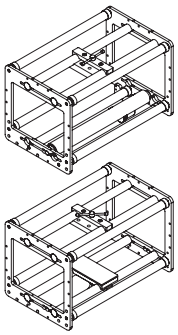

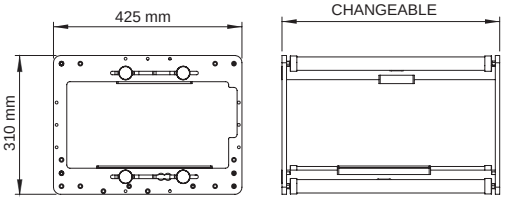

SAVEMA 20 i&c&tr SERIES THERMAL TRANSFER OVERPRINTERS

107*75 I
107*125 I
107 C



Common Specifications for All Printers

Software: SAYASIS Template Design (Date and Time, Custom Formatted Date and Time, Text, Text Block, Merge Fields, Database Support, Counter, Logo, 1D / 2D Barcodes, GS-1 Barcodes, Table Crea tion Support and User-Friendly Interface) Windows Driver Support, Nicelabel Software support, Code soft Software Support, Emulator Support, Printer Management with SPPL (Savema Protocol) Commands, Printer Control with Remote Control)
Barcodes: 1D Barcodes (EAN-13, EAN-8, CODE 128, CODE 39, CODABAR, ITF 2of5, ITF 14, UPC-A,UPC-E ...), 2D Barcodes (Datamatrix, QR Code, PDF417, Aztec code...), GS-1 Barcodes (GS1-128, GS1-Datamatrix, GS1-Databar Barcodes)
Resolution: 300dpi (12 dots/mm) horizontally and vertically
Operating Temperature: 1 °C - 55 °C (34°F-131°F)
Memory: Max. 5000 Template Storage Capacity, 1GB Internal Memory, Up to 16GB SD Memory Card Support, Up to 32GB USB Memory Support

Specifications	107*75 I (Intermittent)	107*125 I (Intermittent)	107 C (Continuous)
Print Area	107 mm x 76 mm	107 mm x 125 mm	107 mm x 125 mm (Standard) 107 mm x 250 mm (Optional 1) 107 mm x 500 mm (Optional 2)
Print Speed	50 - 400 mm/sec	50 - 400 mm/sec	10 - 600 mm/sec
Production	Max. 320 prints/min		Max. 500 prints/min
Ribbon Widths & Length	110 mm (4,28") & 600 meters (656yards) loaded ribbon		
Power Supply	100-240V 50-60 Hz		
Air Supply (Bar)	Min. 1 bar - Max. 4 bar		
Input/Outputs	Print Signal/Fault Signal, Busy Signal		
Output Messages	Update Error, Contact Error, Ribbon Break / Not Found Error, Remaining Ribbon Quantity, Number of Printed Templates, Number of Prints per Minute		Missing Print Error, Encoder Error, Update Error, Contact Error, Ribbon Break / Not Found Error, Remaining Ribbon Quantity, Number of Printed Templates, Number of Prints per Minute
Connection Types	Relay(NPN, PNP) - Photocell(NPN, PNP)		
Communications	RS-232, Ethernet, USB		
Ribbon Save Modes	Vertical & Horizontal Ribbon Save Modes		Vertical Ribbon Save Mode
Advanced Control	7" Touch Screen Control, Template Changing while Running, Print Posi- tion Adjustment, Contrast, Print Delay, Template-Specific Adjustment, Internal Contact Signal, Multi-print Contact Signal, Template Shifting, Template Rotation		7" Touch Screen Control, Template Changing while Running, Contrast, Print Delay, Temp- late-Specific Adjustment, Internal Contact Signal, Multi-print Contact Signal, Template Shifting, Template Rotation
Operator Interface	7" 800x480 Pixels Resolution, Full-color display, Password protection on menus, Multi-language(20) support		
Weight (Printer)	11,6 Kg.	12,6 Kg.	11,1 Kg.
Dimensions	180mm H x 220mm W x 303mm D	180mm H x 265mm W x 303mm D	180mm H x 220mm W x 303mm D

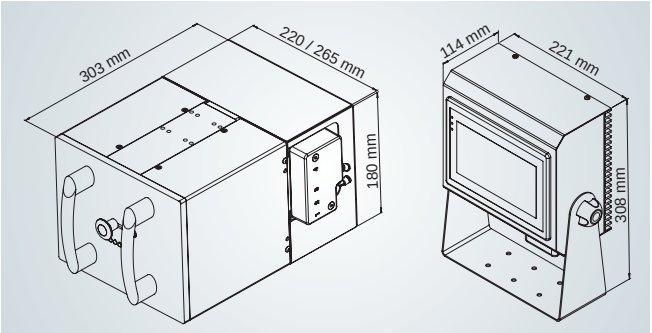

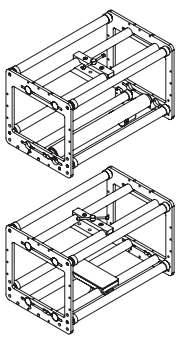

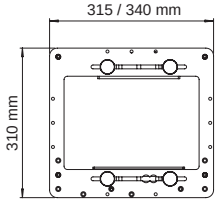

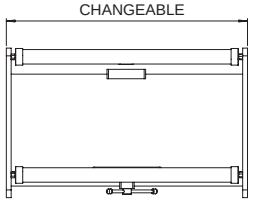

SAVEMA 20 i&c&tr SERIES THERMAL TRANSFER OVERPRINTERS

107*75 I XL
107 C XL





Common Specifications for All Printers

Software: SAYASIS Template Design (Date and Time, Custom Formatted Date and Time, Text, Text Block, Merge Fields, Database Support, Counter, Logo, 1D / 2D Barcodes, GS-1 Barcodes, Table Crea tion Support and User-Friendly Interface) Windows Driver Support, Nicelabel Software support, Code soft Software Support, Emulator Support, Printer Management with SPPL (Savema Protocol) Commands, Printer Control with Remote Control)
Barcodes: 1D Barcodes (EAN-13, EAN-8, CODE 128, CODE 39, CODABAR, ITF 2of5, ITF 14, UPC-A,UPC-E ...), 2D Barcodes (Datamatrix, QR Code, PDF417, Aztec code...), GS-1 Barcodes (GS1-128, GS1-Datamatrix, GS1-Databar Barcodes)
Resolution: 300dpi (12 dots/mm) horizontally and vertically
Operating Temperature: 1 °C - 55 °C (34°F-131°F)
Memory: Max. 5000 Template Storage Capacity, 1GB Internal Memory, Up to 16GB SD Memory Card Support, Up to 32GB USB Memory Support

Specifications	107*75 I XL (Intermittent)	107 C XL (Continuous)
Print Area	107 mm x 76 mm	107 mm x 125 mm (Standard) 107 mm x 250 mm (Optional 1) 107 mm x 500 mm (Optional 2)
Print Speed	50 - 400 mm/sec	10 - 600 mm/sec
Production	Max. 320 prints/min	Max. 300 prints/min
Ribbon Widths & Length	110 mm (4,28") & 1.000 meters (yards) loaded ribbon	
Power Supply	100-240V 50-60 Hz	
Air Supply (Bar)	Min. 1 bar - Max. 4 bar	
Input/Outputs	Print Signal/Fault Signal, Busy Signal	
Output Messages	Update Error, Contact Error, Ribbon Break / Not Found Error, Remaining Ribbon Quantity, Number of Printed Templates, Number of Prints per Minute	Missing Print Error, Encoder Error, Update Error, Contact Error, Ribbon Break / Not Found Error, Remaining Ribbon Quantity, Number of Printed Templates, Number of Prints per Minute
Connection Types	Relay(NPN, PNP) - Photocell(NPN, PNP)	
Communications	RS-232, Ethernet, USB	
Ribbon Save Modes	Vertical & Horizontal Ribbon Save Modes	Vertical Ribbon Save Mode
Advanced Control	7" Touch Screen Control, Template Changing while Running, Print Position Adjustment, Contrast, Print Delay, Template-Specific Adjustment, Internal Contact Signal, Multi-print Contact Signal, Template Shifting, Template Rotation	7" Touch Screen Control, Template Changing while Running, Contrast, Print Delay, Template-Specific Adjustment, Internal Contact Signal, Multi-print Contact Signal, Template Shifting, Template Rotation
Operator Interface	7" 800x480 Pixels Resolution, Full-color display, Password protection on menus, Multi-language(20) support	
Weight (Printer)	11,6 Kg.	11,1 Kg.
Dimensions	180mm H x 265mm W x 303mm D	

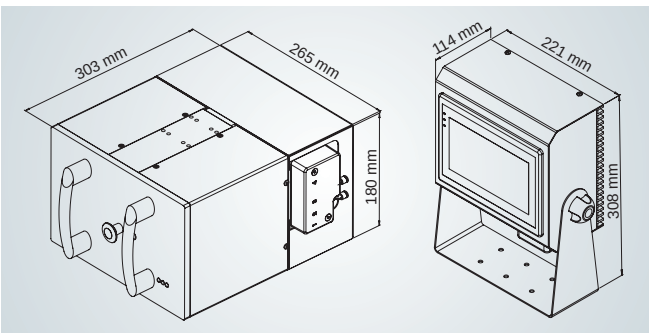

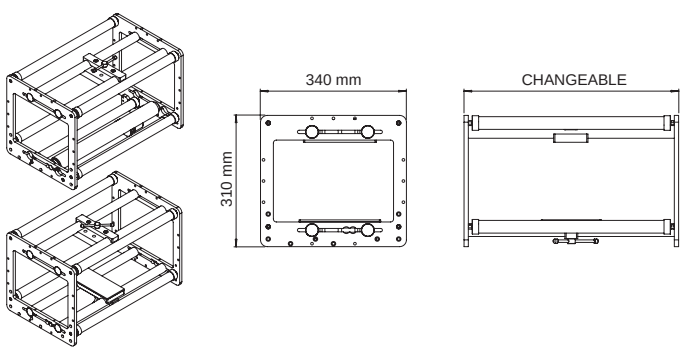

SAVEMA 20 i&c&tr SERIES THERMAL TRANSFER OVERPRINTERS

107*200 I

NEW PRODUCT



Common Specifications for All Printers

Software: SAYASIS Template Design (Date and Time, Custom Formatted Date and Time, Text, Text Block, Merge Fields, Database Support, Counter, Logo, 1D / 2D Barcodes, GS-1 Barcodes, Table Creation Support and User-Friendly Interface) Windows Driver Support, Nicelabel Software support, Code soft Software Support, Emulator Support, Printer Management with SPPL (Savema Protocol) Commands, Printer Control with Remote Control)
Barcodes: 1D Barcodes (EAN-13, EAN-8, CODE 128, CODE 39, CODABAR, ITF 2of5, ITF 14, UPC-A,UPC-E ...), 2D Barcodes (Datamatrix, QR Code, PDF417, Aztec code...), GS-1 Barcodes (GS1-128, GS1-Datamatrix, GS1-Databar Barcodes)
Resolution: 300dpi (12 dots/mm) horizontally and vertically
Operating Temperature: 1 °C - 55 °C (34°F-131°F)
Memory: Max. 5000 Template Storage Capacity, 1GB Internal Memory, Up to 16GB SD Memory Card Support, Up to 32GB USB Memory Support

Specifications	107* 200 I (Intermittent)
Print Area	107 mm x 200 mm
Print Speed	50 - 350 mm/sec
Production	Max. 200 prints/min
Ribbon Widths & Length	110 mm (4,28") & 600 meters (656yards) loaded ribbon
Power Supply	100-240V 50-60 Hz
Air Supply (Bar)	Min. 1 bar - Max. 4 bar
Input/Outputs	Print Signal/Fault Signal, Busy Signal
Output Messages	Update Error, Contact Error, Ribbon Break / Not Found Error, Remaining Ribbon Quantity, Number of Printed Templates, Number of Prints per Minute
Connection Types	Relay(NPN, PNP) - Photocell(NPN, PNP)
Communications	RS-232, Ethernet, USB
Ribbon Save Modes	Vertical & Horizontal Ribbon Save Modes
Advanced Control	7" Touch Screen Control, Template Changing while Running, Print Position Adjustment, Contrast, Print Delay, Template-Specific Adjustment, Internal Contact Signal, Multi-print Contact Signal, Template Shifting, Template Rotation
Operator Interface	7" 800x480 Pixels Resolution, Full-color display, Password protection on menus, Multi-language(20) support
Weight (Printer)	14,2 Kg
Dimensions	180mm H x 305mm W x 345mm D

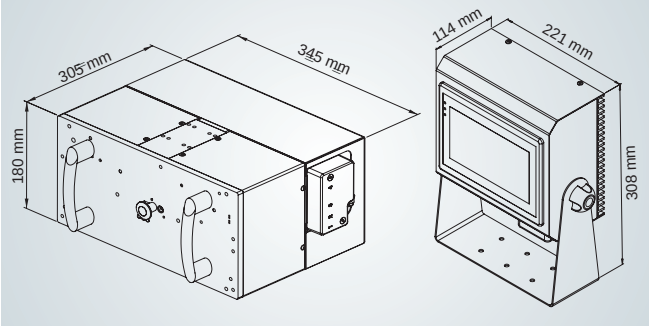

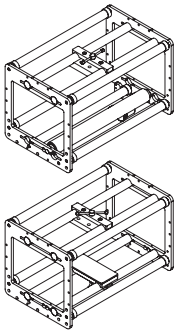

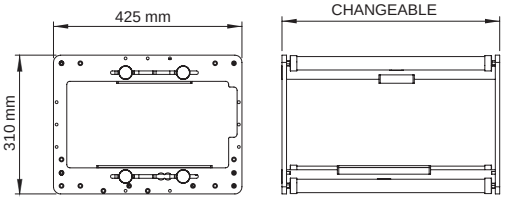

SAVEMA 20 i&c&tr SERIES THERMAL TRANSFER OVERPRINTERS



128*125 I
128 C

Common Specifications for All Printers

Software: SAYASIS Template Design (Date and Time, Custom Formatted Date and Time, Text, Text Block, Merge Fields, Database Support, Counter, Logo, 1D / 2D Barcodes, GS-1 Barcodes, Table Crea tion Support and User-Friendly Interface) Windows Driver Support, Nicelabel Software support, Code soft Software Support, Emulator Support, Printer Management with SPPL (Savema Protocol) Commands, Printer Control with Remote Control)
Barcodes: 1D Barcodes (EAN-13, EAN-8, CODE 128, CODE 39, CODABAR, ITF 2of5, ITF 14, UPC-A,UPC-E ...), 2D Barcodes (Datamatrix, QR Code, PDF417, Aztec code...), GS-1 Barcodes (GS1-128, GS1-Datamatrix, GS1-Databar Barcodes)
Resolution: 300dpi (12 dots/mm) horizontally and vertically
Operating Temperature: 1 °C - 55 °C (34°F-131°F)
Memory: Max. 5000 Template Storage Capacity, 1GB Internal Memory, Up to 16GB SD Memory Card Support, Up to 32GB USB Memory Support

Specifications	128*125 I (Intermittent)	128 C (Continuous)
Print Area	128 mm x 125 mm	128 mm x 200 mm (Standard) 128 mm x 400 mm (Optional)
Print Speed	50 - 300 mm/sec	10 - 400 mm/sec
Production	Max. 280 prints/min	Max. 400 prints/min
Ribbon Widths & Length	130 mm (5,11") & 600 meters (656yards) loaded ribbon	
Power Supply	100-240V 50-60 Hz	
Air Supply (Bar)	Min. 1 bar - Max. 4 bar	
Input/Outputs	Print Signal/Fault Signal, Busy Signal	
Output Messages	Update Error, Contact Error, Ribbon Break / Not Found Error, Remaining Ribbon Quantity, Number of Printed Templates, Number of Prints per Minute	Missing Print Error, Encoder Error, Update Error, Contact Error, Ribbon Break / Not Found Error, Remaining Ribbon Quantity, Number of Printed Templates, Number of Prints per Minute
Connection Types	Relay(NPN, PNP) - Photocell(NPN, PNP)	
Communications	RS-232, Ethernet, USB	
Ribbon Save Modes	Vertical & Horizontal Ribbon Save Modes	Vertical Ribbon Save Mode
Advanced Control	7" Touch Screen Control, Template Changing while Running, Print Position Adjustment, Contrast, Print Delay, Template-Specific Adjustment, Internal Contact Signal, Multi-print Contact Signal, Template Shifting, Template Rotation	7" Touch Screen Control, Template Changing while Running, Contrast, Print Delay, Template-Specific Adjustment, Internal Contact Signal, Multi-print Contact Signal, Template Shifting, Template Rotation
Operator Interface	7" 800x480 Pixels Resolution, Full-color display, Password protection on menus, Multi-language(20) support	
Weight (Printer)	13,2 Kg.	12,7 Kg.
Dimensions	180mm H x 265mm W x 323mm D	

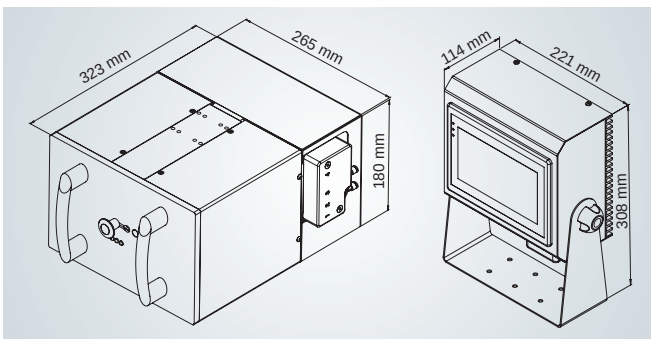

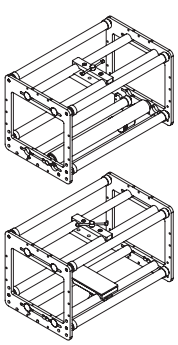

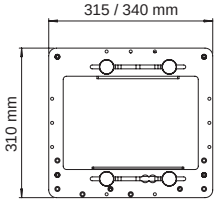

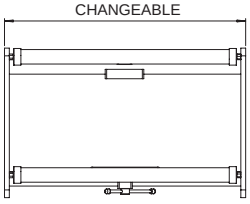

53 C AB
107 C AB

For Autobag Packaging Machineries

Common Specifications for All Printers

Software: SAYASIS Template Design (Date and Time, Custom Formatted Date and Time, Text, Text Block, Merge Fields, Database Support, Counter, Logo, 1D / 2D Barcodes, GS-1 Barcodes, Table Crea tion Support and User-Friendly Interface) Windows Driver Support, Nicelabel Software support, Code soft Software Support, Emulator Support, Printer Management with SPPL (Savema Protocol) Commands, Printer Control with Remote Control)
Barcodes: 1D Barcodes (EAN-13, EAN-8, CODE 128, CODE 39, CODABAR, ITF 2of5, ITF 14, UPC-A,UPC-E ...), 2D Barcodes (Datamatrix, QR Code, PDF417, Aztec code...), GS-1 Barcodes (GS1-128, GS1-Datamatrix, GS1-Databar Barcodes)
Resolution: 300dpi (12 dots/mm) horizontally and vertically
Operating Temperature: 1 °C - 55 °C (34°F-131°F)
Memory: Max. 5000 Template Storage Capacity, 1GB Internal Memory, Up to 16GB SD Memory Card Support, Up to 32GB USB Memory Support





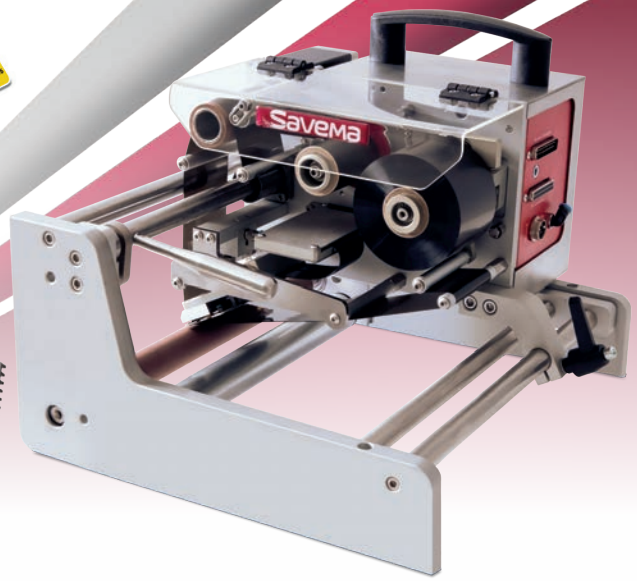

Specifications	53 C AB (Continuous for Autobag)	107 C AB (Continuous for Autobag)
Print Area	53 mm x 125 mm (Standard) 53 mm x 250 mm (Optional 1) 53 mm x 500 mm (Optional 2)	107 mm x 125 mm (Standard) 107 mm x 250 mm (Optional 1) 107 mm x 500 mm (Optional 2)
Print Speed	10 - 800 mm/sec	10 - 600 mm/sec
Production	Max. 500 prints/min	Max. 300 prints/min
Ribbon Widths & Length	35mm, 55 mm (1,4" - 2,2") & 600 meters (656yards) loaded ribbon	110 mm (4,28") & 600 meters (656yards) loaded ribbon
Power Supply	100-240V 50-60 Hz	
Air Supply (Bar)	Min. 1 bar - Max. 4 bar	
Input/Outputs	Print Signal/Fault Signal, Busy Signal	
Output Messages	Missing Print Error, Encoder Error, Update Error, Contact Error, Ribbon Break / Not Found Error, Remaining Ribbon Quantity, Number of Printed Templates, Number of Prints per Minute	
Connection Types	Relay(NPN, PNP) - Photocell(NPN, PNP)	
Communications	RS-232, Ethernet, USB	
Ribbon Save Modes	Vertical Ribbon Save Mode	
Advanced Control	7" Touch Screen Control, Template Changing while Running, Contrast, Print Delay, Template-Specific Adjustment, Internal Contact Signal, Multi-print Contact Signal, Template Shifting, Template Rotation	
Operator Interface	7" 800x480 Pixels Resolution, Full-color display, Password protection on menus, Multi-language(20) support	
Weight (Printer)	6 Kg.	6,5 Kg.
Dimensions	178mm H x 220mm W x 210,5mm D	178mm H x 220mm W x 265,5mm D

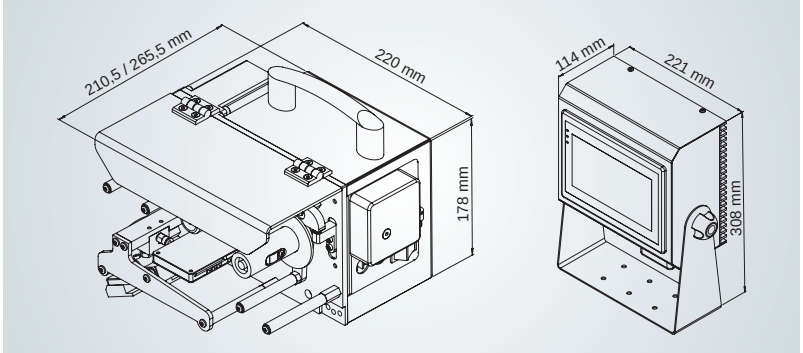

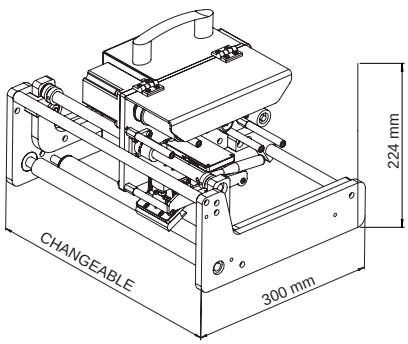

SAVEMA 20 i&c&tr SERIES THERMAL TRANSFER OVERPRINTERS



32*400 TR
53*400 TR
107*400 TR
128*400 TR

Common Specifications for All Printers

Software: SAYASIS Template Design (Date and Time, Custom Formatted Date and Time, Text, Text Block, Merge Fields, Database Support, Counter, Logo, 1D / 2D Barcodes, GS-1 Barcodes, Table Crea tion Support and User-Friendly Interface) Windows Driver Support, Nicelabel Software support, Code soft Software Support, Emulator Support, Printer Management with SPPL (Savema Protocol) Commands, Printer Control with Remote Control)
Barcodes: 1D Barcodes (EAN-13, EAN-8, CODE 128, CODE 39, CODABAR, ITF 2of5, ITF 14, UPC-A,UPC-E ...), 2D Barcodes (Datamatrix, QR Code, PDF417, Aztec code...), GS-1 Barcodes (GS1-128, GS1-Datamatrix, GS1-Databar Barcodes)
Resolution: 300dpi (12 dots/mm) horizontally and vertically
Operating Temperature: 1 °C - 55 °C (34°F-131°F)
Memory: Max. 5000 Template Storage Capacity, 1GB Internal Memory, Up to 16GB SD Memory Card Support, Up to 32GB USB Memory Support

Specifications	32*400 TR (Traverse)	53*400 TR (Traverse)	107*400 TR (Traverse)	128*400 TR (Traverse)
Print Area	32mm x 125mm (in one print standard) 32mm x 400mm (in one print optional)	53mm x 125mm (in one print standard) 53mm x 400mm (in one print optional)	107mm x 125mm (in one print standard) 107mm x 400mm (in one print optional)	128mm x 125mm (in one print standard) 128mm x 400mm (in one print optional)
Print Speed	50 - 400 mm/sec			
Ribbon Widths & Length	22mm, 35 mm, 55mm, 110mm (0,9" - 1,4" - 2,2" - 4,28") & 600 meters (656yards) loaded ribbon			
Power Supply	100-240V 50-60 Hz			
Air Supply (Bar)	Min. 1 bar - Max. 4 bar		Min. 2 bar - Max. 5 bar	
Input/Outputs	Print Signal/Fault Signal, Busy Signal			
Output Messages	Update Error, Contact Error, Ribbon Break / Not Found Error, Number of Printed Templates, Number of Prints per Minute			
Connection Types	Relay(NPN, PNP) - Photocell(NPN, PNP)			
Communications	RS-232, Ethernet, USB			
Advanced Control	7" Touch Screen Control, Template Changing while Running, Print Position Adjustment, Contrast, Print Delay, Template-Specific Adjustment, Internal Contact Signal, Multi-print Contact Signal, Template Shifting, Template Rotation			
Operator Interface	7" 800x480 Pixels Resolution, Full-color display, Password protection on menus, Multi-language(20) support			
Weight (Printer)	23 Kg.		24 Kg.	25 Kg.
Dimensions	236mm H x 334mm W x 750mm L		236mm H x 391mm W x 750mm L	236mm H x 411mm W x 750mm L

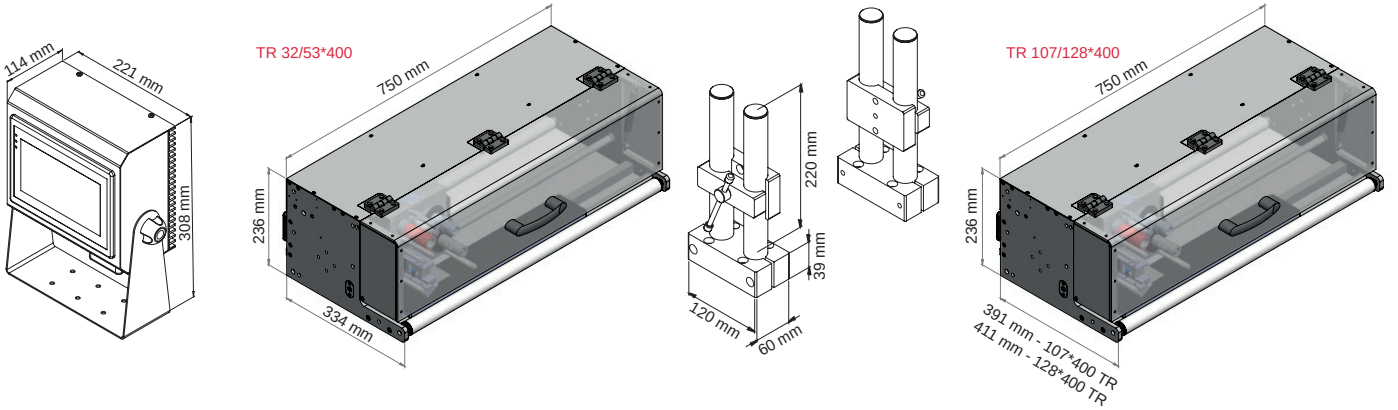

SAVEMA 20 i&c&tr SERIES THERMAL TRANSFER OVERPRINTERS

32*600 TR
53*600 TR
107*600 TR
128*600 TR



Common Specifications for All Printers

Software: SAYASIS Template Design (Date and Time, Custom Formatted Date and Time, Text, Text Block, Merge Fields, Database Support, Counter, Logo, 1D / 2D Barcodes, GS-1 Barcodes, Table Crea tion Support and User-Friendly Interface) Windows Driver Support, Nicelabel Software support, Code soft Software Support, Emulator Support, Printer Management with SPPL (Savema Protocol) Commands, Printer Control with Remote Control)
Barcodes: 1D Barcodes (EAN-13, EAN-8, CODE 128, CODE 39, CODABAR, ITF 2of5, ITF 14, UPC-A,UPC-E ...), 2D Barcodes (Datamatrix, QR Code, PDF417, Aztec code...), GS-1 Barcodes (GS1-128, GS1-Datamatrix, GS1-Databar Barcodes)
Resolution: 300dpi (12 dots/mm) horizontally and vertically
Operating Temperature: 1 °C - 55 °C (34°F-131°F)
Memory: Max. 5000 Template Storage Capacity, 1GB Internal Memory, Up to 16GB SD Memory Card Support, Up to 32GB USB Memory Support

Specifications	32*600 TR (Traverse)	53*600 TR (Traverse)	107*600 TR (Traverse)	128*600 TR (Traverse)
Print Area	32mm x 125mm (in one print standard) 32mm x 500mm (in one print optional)	53mm x 125mm (in one print standard) 53mm x 500mm (in one print optional)	107mm x 125mm (in one print standard) 107mm x 500mm (in one print optional)	128mm x 125mm (in one print standard) 128mm x 400mm (in one print optional)
Print Speed	50 - 400 mm/sec			
Ribbon Widths & Length	22mm, 35 mm, 55mm, 110mm (0,9" - 1,4" - 2,2" - 4,28") & 600 meters (656yards) loaded ribbon			
Power Supply	100-240V 50-60 Hz			
Air Supply (Bar)	Min. 1 bar - Max. 4 bar		Min. 2 bar - Max. 5 bar	
Input/Outputs	Print Signal/Fault Signal, Busy Signal			
Output Messages	Update Error, Contact Error, Ribbon Break / Not Found Error, Number of Printed Templates, Number of Prints per Minute			
Connection Types	Relay(NPN, PNP) - Photocell(NPN, PNP)			
Communications	RS-232, Ethernet, USB			
Advanced Control	7" Touch Screen Control, Template Changing while Running, Print Position Adjustment, Contrast, Print Delay, Template-Specific Adjustment, Internal Contact Signal, Multi-print Contact Signal, Template Shifting, Template Rotation			
Operator Interface	7" 800x480 Pixels Resolution, Full-color display, Password protection on menus, Multi-language(20) support			
Weight (Printer)	25 Kg.		26 Kg.	27 Kg.
Dimensions	236mm H x 334mm W x 950mm L		236mm H x 391mm W x 950mm L	236mm H x 411mm W x 950mm L

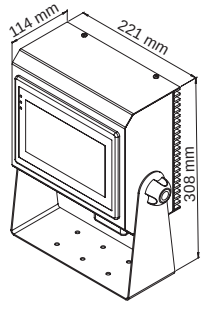

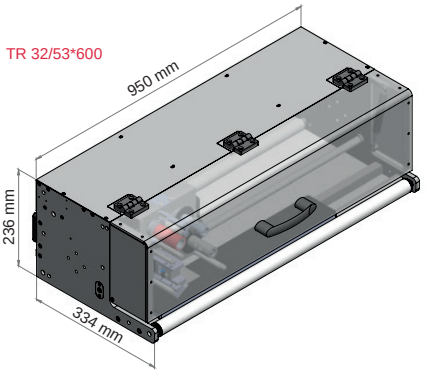

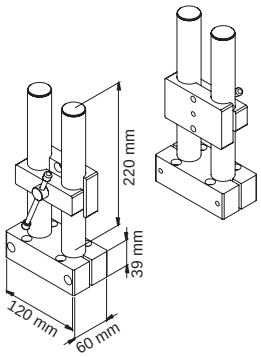

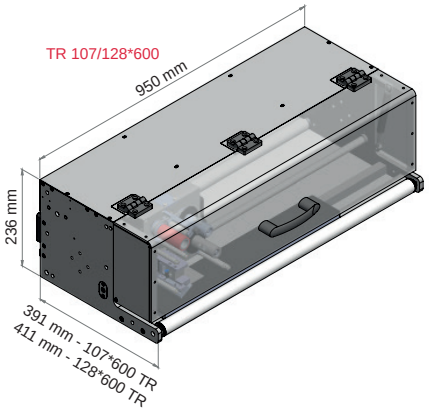

32*400 DPH TR
32*600 DPH TR
53*400 DPH TR
53*600 DPH TR

DPH: Double Print Head



Common Specifications for All Printers

Software: SAYASIS Template Design (Date and Time, Custom Formatted Date and Time, Text, Text Block, Merge Fields, Database Support, Counter, Logo, 1D / 2D Barcodes, GS-1 Barcodes, Table Crea tion Support and User-Friendly Interface) Windows Driver Support, Nicelabel Software support, Code soft Software Support, Emulator Support, Printer Management with SPPL (Savema Protocol) Commands, Printer Control with Remote Control)
Barcodes: 1D Barcodes (EAN-13, EAN-8, CODE 128, CODE 39, CODABAR, ITF 2of5, ITF 14, UPC-A,UPC-E ...), 2D Barcodes (Datamatrix, QR Code, PDF417, Aztec code...), GS-1 Barcodes (GS1-128, GS1-Datamatrix, GS1-Databar Barcodes)
Resolution: 300dpi (12 dots/mm) horizontally and vertically
Operating Temperature: 1 °C - 55 °C (34°F-131°F)
Memory: Max. 5000 Template Storage Capacity, 1GB Internal Memory, Up to 16GB SD Memory Card Support, Up to 32GB USB Memory Support

Specifications	32*400 TR (Double P.Head)	53*400 TR (Double P.Head)	32*600 TR (Double P.Head)	53*600 TR (Double P.Head)
Print Area	32mm x 125mm (in one print standard) 32mm x 400mm (in one print optional)	53mm x 125mm (in one print standard) 53mm x 400mm (in one print optional)	32mm x 125mm (in one print standard) 32mm x 500mm (in one print optional)	53mm x 125mm (in one print standard) 53mm x 500mm (in one print optional)
Print Speed	50 - 400 mm/sec			
Ribbon Widths & Length	22mm, 35 mm, 55mm (0,9" - 1,4" - 2,2" - 4,28") & 600 meters (656yards) loaded ribbon			
Power Supply	100-240V 50-60 Hz			
Air Supply (Bar)	Min. 1 bar - Max. 4 bar			
Input/Outputs	Print Signal/Fault Signal, Busy Signal			
Output Messages	Update Error, Contact Error, Ribbon Break / Not Found Error, Number of Printed Templates, Number of Prints per Minute			
Connection Types	Relay(NPN, PNP) - Photocell(NPN, PNP)			
Communications	RS-232, Ethernet, USB			
Advanced Control	7" Touch Screen Control, Template Changing while Running, Print Position Adjustment, Contrast, Print Delay, Template-Specific Adjustment, Internal Contact Signal, Multi-print Contact Signal, Template Shifting, Template Rotation			
Operator Interface	7" 800x480 Pixels Resolution, Full-color display, Password protection on menus, Multi-language(20) support			
Weight (Printer)	28 Kg.		30 Kg.	
Dimensions	236mm H x 334mm W x 750mm L		236mm H x 334mm W x 950mm L	

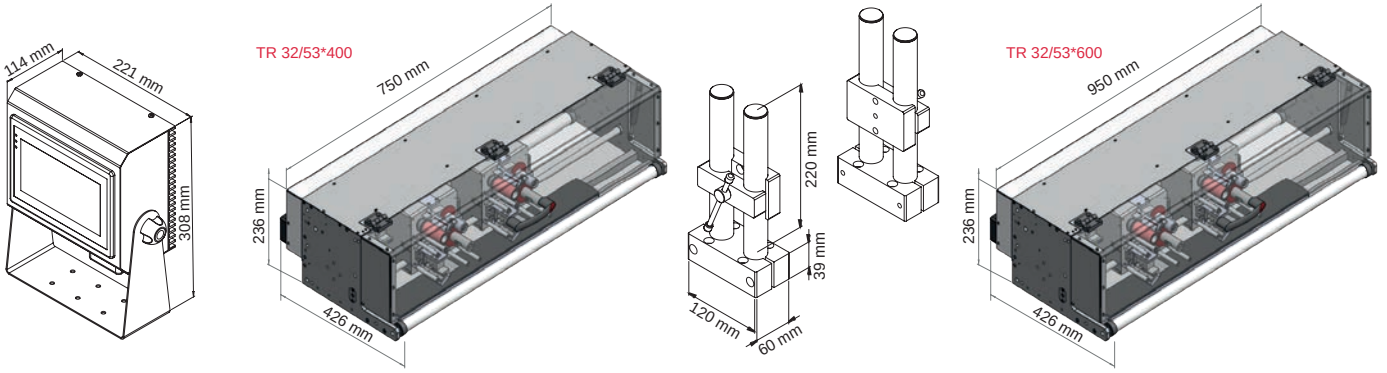

SVM D-110





Specifications	D-110 S	D-110 F
Label Speed	Max. 30 meters/min	Max. 60 meters/min
Power Supply	100-240V AC, 500W, 50-60 Hz	
I/O Interface	Label Feeding Signal Input / Fault Signal Output, Busy Signal Output	
Interface(optional)	Modbus RTU, Modbus TCP, Ethernet TCP/IP, Can-Open, Start / Stop Signal	
Connection Types	Relay (NPN-PNP) - Photocell (NPN-PNP)	
Advanced Properties	Working with encoder or without encoder, printer can be connected (optional) blowermechanism can be connected (optional), transparent label sensor (optional), missing label error, label broken error, printer fault error	
Operation	4.3" / 272x480 pixel resolution touchscreen, user menu, setting menu, user start/stop, user administration, manual label feed	
Language	Multi-Language System(TR,EN,IT,DE,RU,AR,FR,ES,CS,NL,CN,KO,PT,EL,FA)	
Max Label Roll Diameter	300 mm	
Reel Holder	76 mm	
Max Label Width	110 mm	
Weight	25 kg	
Printers Can Be Installed	SVM 32*53*107 mm Intermittent Printers	



SVM D-110 (HORIZONTAL)

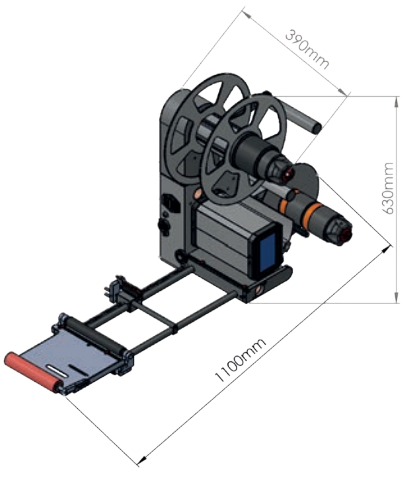

SVM D-110 (VERTICAL)



SVM D-160

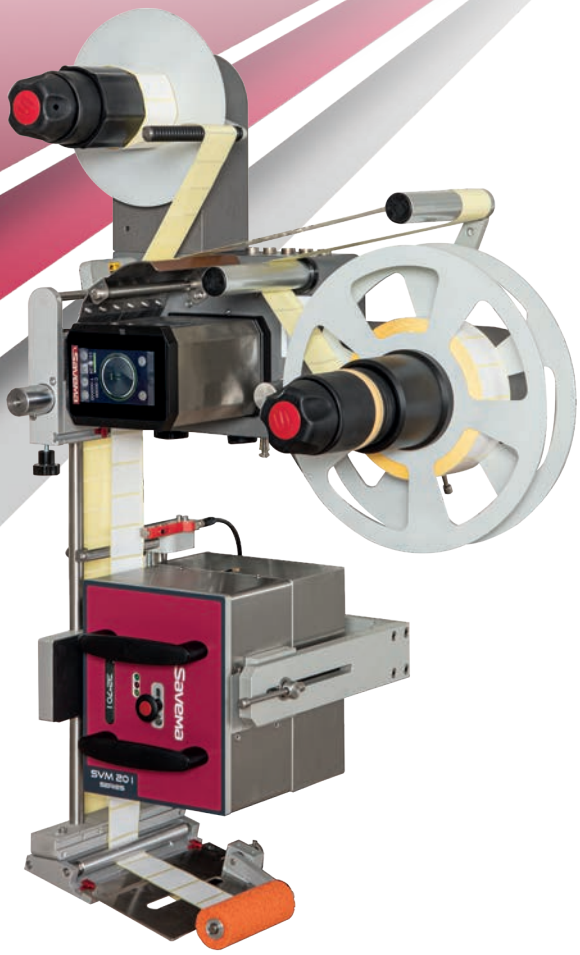



Specifications	Dispenser D-160
Label Speed	Max. 45 meters/min
Power Supply	100-240V AC, 500W, 50-60 Hz
I/O Interface	Label Feeding Signal Input / Fault Signal Output, Busy Signal Output
Interface(optional)	Modbus RTU, Modbus TCP, Ethernet TCP/IP, Can-Open, Start / Stop Signal
Connection Types	Relay (NPN-PNP) - Photocell (NPN-PNP)
Advanced Properties	Working with encoder or without encoder, printer can be connected (optional) blowermechanism can be connected (optional), transparent label sensor (optional), missing label error, label broken error, printer fault error
Operation	4.3" / 272x480 pixel resolution touchscreen, user menu, setting menu, user start/stop, user administration, manual label feed
Language	Multi-Language System(TR,EN,IT,DE,RU,AR,FR,ES,CS,NL,CN,KO,PT,EL,FA)
Max Label Roll Diameter	300 mm
Reel Holder	76 mm
Max Label Width	160 mm
Weight	30 kg
Printers Can Be Installed	SVM 32*53*107 mm Intermittent Printers



SVM D-160 (HORIZONTAL)

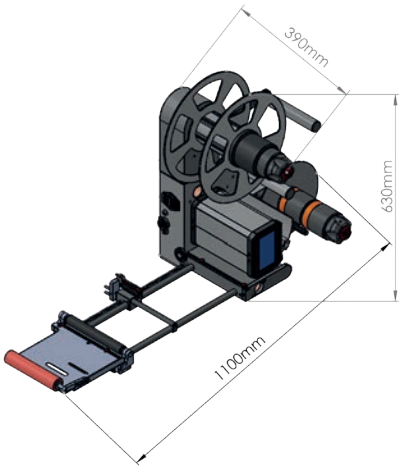

SVM D-160 (VERTICAL)

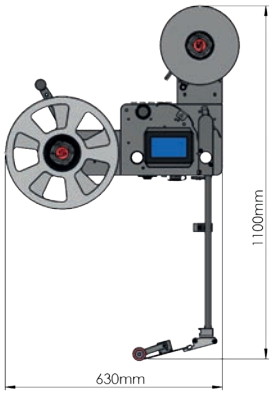

SVM D-240





Specifications	Dispenser D-240
Label Speed	Max. 30 meters/min
Power Supply	100-240V AC, 500W, 50-60 Hz
I/O Interface	Label Feeding Signal Input / Fault Signal Output, Busy Signal Output
Interface(optional)	Modbus RTU, Modbus TCP, Ethernet TCP/IP, Can-Open, Start / Stop Signal
Connection Types	Relay (NPN-PNP) - Photocell (NPN-PNP)
Advanced Properties	Working with encoder or without encoder, printer can be connected (optional) blowermechanism can be connected (optional), transparent label sensor (optional), missing label error, label broken error, printer fault error
Operation	4.3" / 272x480 pixel resolution touchscreen, user menu, setting menu, user start/stop, user administration, manual label feed
Language	Multi-Language System(TR,EN,IT,DE,RU,AR,FR,ES,CS,NL,CN,KO,PT,EL,FA)
Max Label Roll Diameter	300 mm
Reel Holder	76 mm
Max Label Width	240 mm
Weight	35 kg
Printers Can Be Installed	SVM 32*53*107*128 mm Intermittent Printers



SVM D-240 (HORIZONTAL)

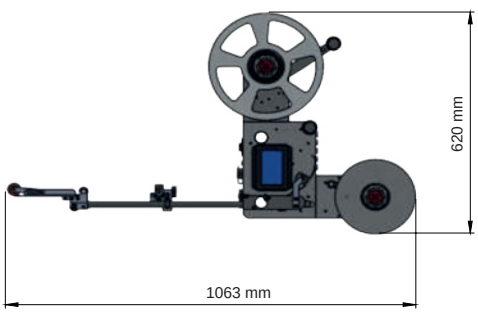

SVM D-240 (VERTICAL)

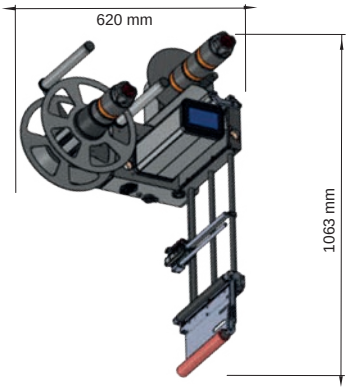

SVM 100-A1 FRICTION FEEDER
SVM 100-A2 VACUUM FEEDER
SVM 100-B1 CONVEYOR BELT
SVM 100-B2 CONTINUOUS CONVEYOR BELT



SVM 100 - A1 FRICTION FEEDER

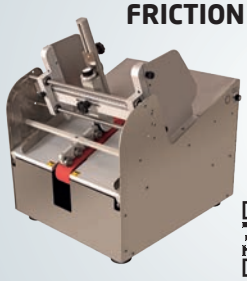

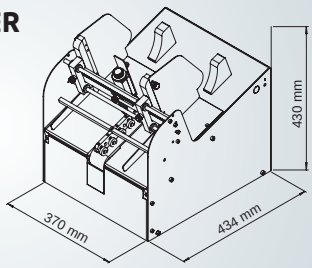

SVM 100 - A2 VACUUM FEEDER



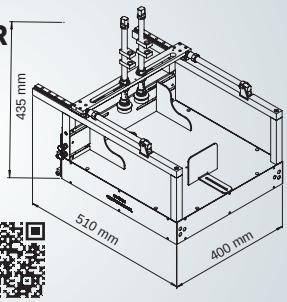

Friction Feeder Specificiations	
Min. Width of Product	50mm (W) x 80mm (L)
Max. Width of Product	300mm (W) x 400mm (L)
Min-Max Product Thickness	0,1 – 4 mm (depend on product type)
Belt Speed	600 mm/sec.
Power	100-120V 50-60 Hz 200-240V 50-60 Hz
Weight	20 Kg

Vacuum Feeder Specificiations	
Min. Width of Product	100mm (W) x 100mm (L)
Max. Width of Product	300mm (W) x 320mm (L)
Power	100-120V 50-60 Hz 200-240V 50-60 Hz
Weight	14 Kg

SVM 100 - B1 CONVEYOR BELT



SVM 100 - B2 CONTINUOUS CONVEYOR BELT



Specifications	Conveyor Belt (Intermittent)	Continuous Conveyor Belt
Min. Width of Product	50mm (W) x 80mm (L)	
Max. Width of Product	300mm (W) x 400mm (L)	
Belt Speed	50-500 mm/sec.	
Power	100-120V 50-60 Hz & 200-240V 50-60 Hz	
Weight	55 Kg	
Operation Mode	Intermittent/Continous	

CONSUMABLES

NEAR EDGE KCE 107 THERMAL PRINT HEAD

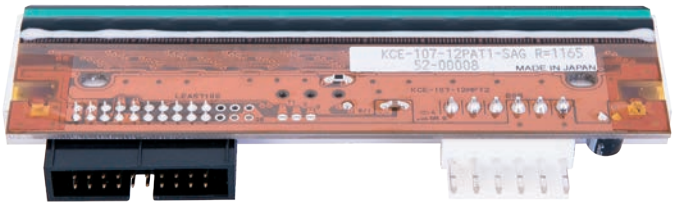

NEAR EDGE KCE 128 THERMAL PRINT HEAD

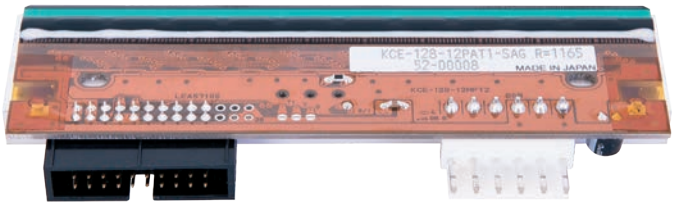

NEAR EDGE KCE 32 THERMAL PRINT HEAD

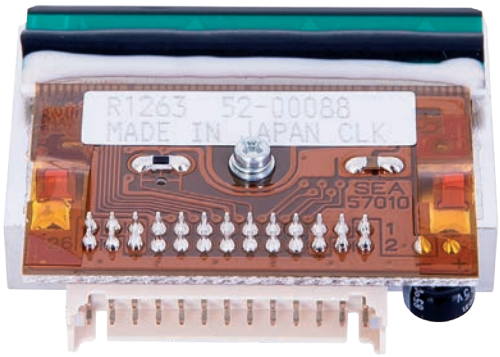

NEAR EDGE KCE 53 THERMAL PRINT HEAD

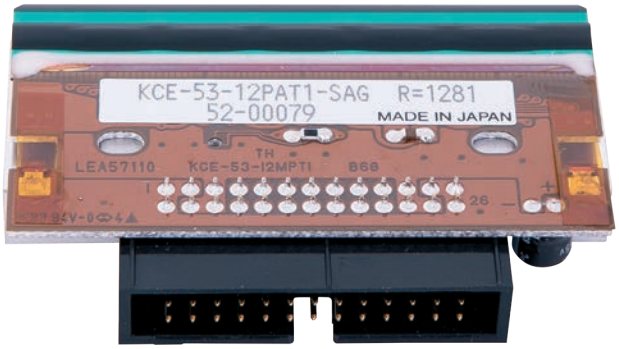

NEAR EDGE THERMAL RIBBONS



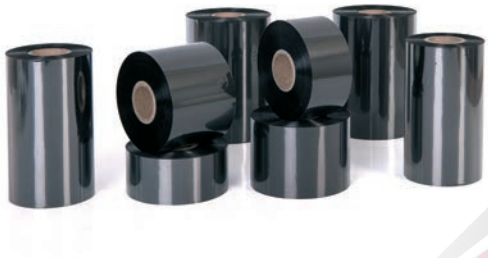

- Wax/Resin Grade
- Premium Wax/Resin Grade
- Resin Grade



fortis 0 332 342 08 62



Savema
Marking and Coding Machines

Büyükkayacıkosb mah. Kuddusi Cad.
No: 4 42280
Selçuklu / Konya / TÜRKİYE

Tel : +90 332 239 23 39
Fax: +90 332 239 23 19

www.savema.com.tr
info@savema.com.tr