INDUSTRIAL INKJET PRINTER

MARKOPRINT X1JET HP STITCH

Super compact and 8-fold cascadable printer

+ Electronics are mounted behind the cartridge to save space
+ Cascading of up to 8 printheads (100 mm print image)
+ Stackability for multi-purpose applications
+ Print height of a single printhead up to 12.7 mm
+ High print resolution up to 600 dpi
+ Achieves print speeds of up to 90 m/min



PARTICULARLY SPACE-SAVING AND FLEXIBLE PRINTER

The Markoprint X1JET HP Stitch has a particularly narrow design. The electronics are mounted behind the cartridge to save space. The thermal inkjet printer with HP cartridge technology also combines the printhead and controller in a robust enclosure made of anodised aluminium. This makes the printer extremely compact and therefore easy to integrate.

The Markoprint X1JET HP Stitch is the solution for narrow installation spaces or when several systems need to be mounted close together. The latter can be the case, for example, if several 12.5 mm high print images have to be produced simultaneously in a multi-lane thermoforming packaging system.

The Markoprint X1JET HP Stitch prints text, 1D barcodes, 2D codes and graphics in high resolution and delivers brilliant print results on products and packaging. The system is suitable for numerous printing tasks in the food, chemical, building materials and pharmaceutical industries.

APPLICATIONS

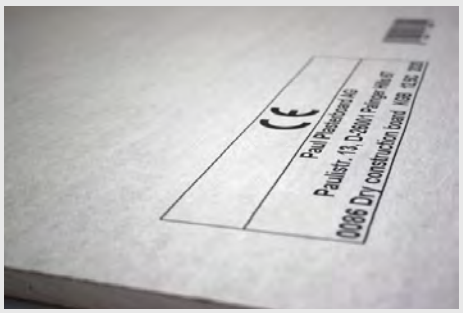





MADE IN GERMANY

WEBER MARKING SYSTEMS

INDUSTRIAL INKJET PRINTER

MARKOPRINT X1JET HP STITCH

SPECIAL FEATURES

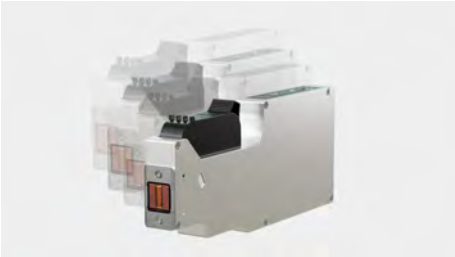

CASCADING OF UP TO 8 PRINTHEADS

Several X1JET HP Stitch printheads can be flexibly combined, enabling simple cascading. In this way, the print width can be significantly expanded, making it easy to implement even large-area print images. With up to eight cascaded printheads, a seamless print image up to 100 mm high is created. This opens up new application possibilities, such as for wide packaging or labels with large amounts of information.



STACKABILITY FOR MULTI-PURPOSE APPLICATIONS

The simultaneous printing of multiple 12.5 mm high print images leads to a significant increase in productivity and efficiency in the marking process. Different information can be applied in parallel without additional work steps. This multi-print function enables fast throughput times and ensures high flexibility, especially in production environments with high marking requirements.



INTUITIVE OPERATION VIA 3 LOGIC KEYS WITH LED INDICATOR LIGHTS

Simple operation via 3 logic keys with LED indicator lights on the top of the housing ensures user-friendly system control. This means that even untrained employees can operate the Markoprint X1JET HP Stitch and carry out print jobs safely.



SMARTCARD TECHNOLOGY FOR CONSISTENTLY GOOD PRINTS

A chip in the ink cartridges identifies the current ink type and automatically sets the corresponding parameters. There is no need to switch over manually when changing the ink. The ink level is also recorded and displayed in real time. This enables controlled cartridge replacement and prevents unplanned production downtimes. Thanks to the Click'n Print cartridge holder, ink changes are quick and easy.



CLEAR PERFORMANCE LEVELS FOR FLEXIBLE AND SCALABLE PRINTING SOLUTIONS

The specially developed Coding Score makes it easier to select and configure Markoprint printing systems. The performance levels – PRINT, BASIC, ADVANCED, PRO, and ULTIMATE – are clearly defined, easy to compare, and vary depending on the system. This creates transparency in decision-making and ensures investment security in a marking solution that can be flexibly expanded at any time. New requirements for production, efficiency, or sustainability can be easily integrated, securing consistently powerful and economical processes.

INDUSTRIAL INKJET PRINTER

MARKOPRINT X1JET HP STITCH

TECHNICAL SPECIFICATIONS

PRINTING SPECIFICATIONS

	Print	Basic	Advanced	Pro
Printer type	Thermal Ink Jet (TIJ)			
Supported printing technology	HP			
Print height	1 - 12.7 mm			
Vertical print resolution up to	300 dpi	300 dpi	600 dpi	600 dpi
Print speed up to	30 m/min	30 m/min	60 m/min	90 m/min
Recommended distance printhead to product	1 mm			
Distance from printhead to product	1 - 4 mm			
Maximum number of production lines	1			
Orientation	From left to right; From right to left			
Function	Top printing; Lateral printing			
Printable content	Text fields; BMP graphics	Text fields; BMP graphics; Time indication; Date field	Barcodes; Text fields; BMP graphics; Counter; Time indication; Date field; Date offset; Input of variables; Fields of action	Barcodes; 2D codes; Text fields; BMP graphics; Counter; Time indication; Date field; Date offset; Input of variables; Fields of action
Barcodes			Code 2 out of 5; Code 39; Code 128; EAN 8; EAN 13; GS1 Databar	Code 2 out of 5; Code 39; Code 128; DataMatrix; EAN 8; EAN 13; GS1 DataMatrix; GS1 Databar; QR code; more on request; UPC-A; UPC-E
DBPrint	–	–	–	+
PDF direct printing	+			
Fonts	Customized fonts; All Windows fonts			
Software requirements	Processor with at least 1 GHz; Interface for connecting the printing device; PC mouse or touchscreen; DirectX 9 or higher with WDDM 1.0 driver; Min. 30 GB hard disk space; 2 GB for 32-bit or 4 GB for 64-bit; Windows 7, 8, 10			
Interpreter software	integra Command			
Spitting	+			

INK

Colour	Blue; Yellow; Green; White; Red; Black; UV-visible; UV-curing [1]
Composition	Solvent-based; Water-based

[1] A maximum of one ink per system can be used.

INDUSTRIAL INKJET PRINTER

MARKOPRINT X1JET HP STITCH

HARDWARE

	Print	Basic	Advanced	Pro
Display	no display			
External control panel/display	External Vivid Display; External HMI display			
Password protection	–	–	–	–
Internal sensor	–			
Sensor signal	NPN; Switching threshold 7V			
Shaft encoder signal	Frequency max.150 kHz; Switching threshold 7 V; 24 V voltage; Push-pull or NPN			
Status/ Alarm outputs	4	4	4	4
Flash memory expansion as an option	–			
USB memory stick slot	+			
SD memory card slot	–			
PCMCIA slot	–			
WIFI	–	–	–	–
interfaces	Ethernet (TCP/IP); RS-232; 15-pin SUB-D (connection shaft encoder/sensor/inputs and outputs and optional power supply)			

PHYSICAL ASPECTS

System dimensions (HxWxL)	103 x 26 x 232 mm
Weight	0.5 kg
IP ingress protection	IP 40
Authorisations	CE
Rel. humidity non-condensing	10 - 90 %
Ambient temperature	5 - 40°C
Supply voltage	90-240 V
Mains frequency	50-60 Hz
Amperage	1.25 A
Power consumption	15 W

INDUSTRIAL INKJET PRINTER

MARKOPRINT X1JET HP STITCH

TECHNICAL DRAWINGS

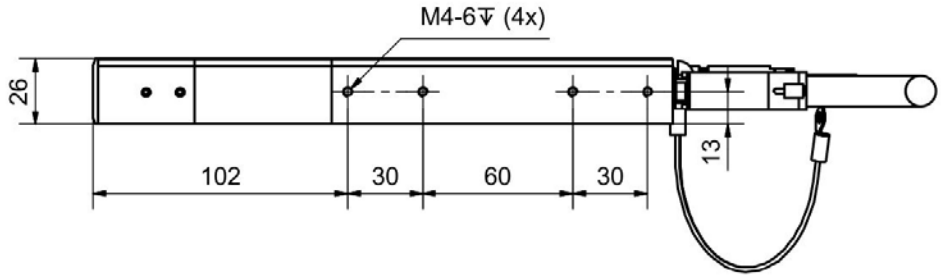

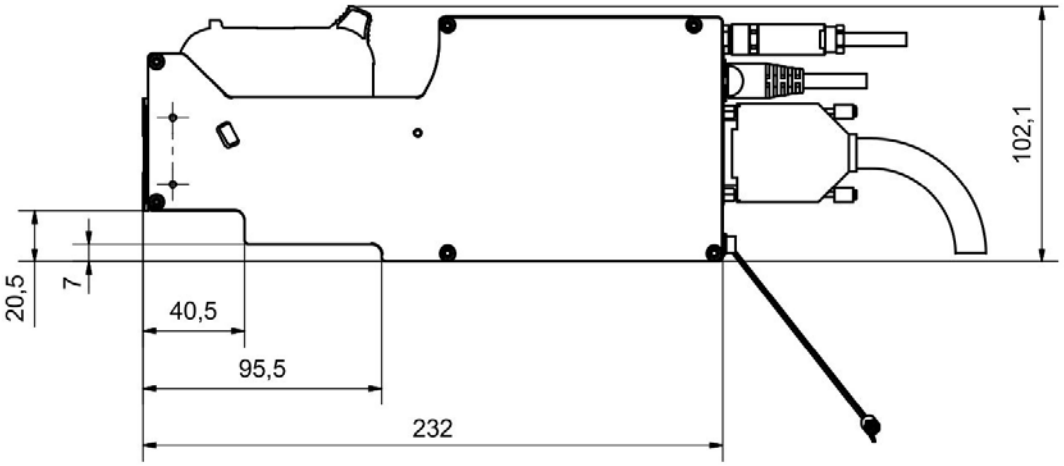

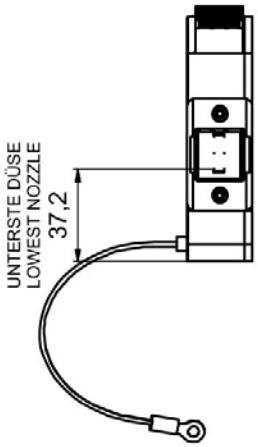

INDUSTRIAL INKJET PRINTER

MARKOPRINT X1JET HP STITCH

ACCESSORIES



INTEGRA VIVID

The 7″ high-resolution HMI color touchscreen of integra Vivid provides a visual display of print jobs and the status of X1JET and PP Class printing systems. At a glance, you can see whether the printing system is operating, the cartridge ink levels, and the current print speed.
The innovative swipe-based UI makes editing printer settings and changing print jobs directly on the display especially easy.
With its IP52 rating, it is protected in dusty production environments and against dripping water.



HMI DISPLAY

The high-resolution OLED display visualizes functions and settings of the Markoprint inkjet printers of the X1JET series. Printer status, parameters, and print images can be checked and adjusted, and data can be entered directly. Start/stop buttons enable simple, intuitive operation and direct triggering of the print job.

Thanks to its compact, rugged design, the system can be integrated into production lines in a space-saving manner—either as a tabletop unit or via wall mounting. It is hot-plug capable and can be connected to other compatible systems during operation. Control is handled via an iLOGIK rotary knob; for print images with a variable field, the input mask appears automatically.

INDUSTRIAL INKJET PRINTER

MARKOPRINT X1JET HP STITCH



YOUR RELIABLE PARTNER

+ PERSONAL POINT OF CONTACT
Your personal point of contact from our team will listen to you and explain the options.

+ MADE IN GERMANY
With our Made in Germany production, we guarantee quality and availability.

+ APPROPRIATE SOLUTION
We develop the optimal solution for your requirements, independently of technology.

+ SEAMLESS SERVICE
Our comprehensive service network is always on hand to help.

+ REGIONALLY ROOTED, GLOBALLY CONNECTED
As a family-owned company with branches worldwide, customer relations are always our top priority.

Weber Marking Systems GmbH

Maarweg 33 / 53619 Rheinbreitbach
T +49 (0)2224 77 08 0 / info@webermarking.de
weber-marking.com

2026-08-13 | en_INT

MADE IN GERMANY

WEBER MARKING SYSTEMS