INDUSTRIAL INKJET PRINTER

MARKOPRINT X1JET HP STANDARD

Cost-effective entry-level system and compact all-rounder for system integration



+ Print height up to 12.7 mm, print resolution up to 600 dpi
+ Achieves print speeds of up to 60 m/min
+ Particularly compact design with low space requirements
+ Low maintenance and easy to operate
+ Integrated photo sensor for product detection

THE UNIVERSAL: SPACE-SAVING, AFFORDABLE AND FLEXIBLE PRINTING

The Markoprint X1JET HP Standard labels flat absorbent and semi-absorbent surfaces precisely and reliably. The thermal inkjet printer with HP cartridge technology combines a printhead and controller in a robust enclosure made of anodised aluminium. This makes the printer extremely compact and therefore easy to integrate. Where space is limited, for integration into existing production systems or for the development of new system concepts - the Markoprint X1JET HP Standard offers maximum planning freedom.



The printhead is also part of the ink cartridge. This means that the printhead is also replaced every time the cartridge is changed. This saves time-consuming maintenance and cleaning work and ensures optimum printing results. The Markoprint X1JET HP Standard prints text, 1D barcodes, 2D codes and graphics in high resolution and delivers brilliant print results on products and packaging. The labeling is smudge-proof, easy to read and durable and is suitable for the food, chemical, building materials and pharmaceutical industries, among others.

APPLICATIONS





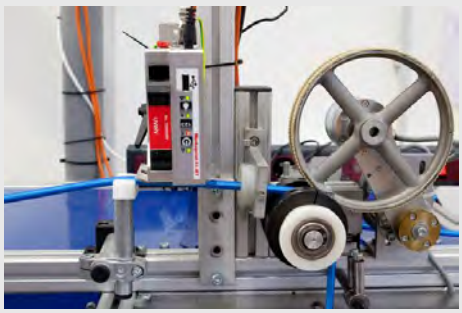

MADE IN GERMANY

WEBER MARKING SYSTEMS

INDUSTRIAL INKJET PRINTER

MARKOPRINT X1JET HP STANDARD

SPECIAL FEATURES



INTEGRATED PHOTO SENSOR

The photo sensor precisely detects when a product is in the exact right position to reliably trigger the printing process. This ensures that every label or print is executed with pinpoint accuracy and consistent quality. The sensor continuously monitors the process and plays a key role in maintaining consistently high print quality as well as exact positioning directly on the production line.



INTUITIVE OPERATION VIA 3 LOGIC KEYS WITH LED INDICATOR LIGHTS

Simple operation via 3 logic keys with LED indicator lights on the top of the housing ensures user-friendly system control. This means that even untrained employees can operate the Markoprint X1JET HP Standard and carry out print jobs safely.



SMARTCARD TECHNOLOGY FOR CONSISTENTLY GOOD PRINTS

A chip in the ink cartridge identifies the current ink type and automatically sets the corresponding parameters. There is no need to switch over manually when changing the ink. The ink level is also recorded and displayed in real time. This enables controlled cartridge replacement and prevents unplanned production downtimes. Thanks to the Click'n Print cartridge holder, ink changes are quick and easy.



CLEAR PERFORMANCE LEVELS FOR FLEXIBLE AND SCALABLE PRINTING SOLUTIONS

The specially developed Coding Score makes it easier to select and configure Markoprint printing systems. The performance levels – PRINT, BASIC, ADVANCED, PRO, and ULTIMATE – are clearly defined, easy to compare, and vary depending on the system. This creates transparency in decision-making and ensures investment security in a marking solution that can be flexibly expanded at any time. New requirements for production, efficiency, or sustainability can be easily integrated, securing consistently powerful and economical processes.

INDUSTRIAL INKJET PRINTER

MARKOPRINT X1JET HP STANDARD

TECHNICAL SPECIFICATIONS

PRINTING SPECIFICATIONS

	Print	Basic	Advanced	Pro
Printer type	Thermal Ink Jet (TIJ)			
Supported printing technology	HP			
Print height	1 - 12.7 mm			
Vertical print resolution up to	300 dpi	300 dpi	600 dpi	600 dpi
Print speed up to	30 m/min	30 m/min	60 m/min	90 m/min
Recommended distance printhead to product	1 mm			
Distance from printhead to product	1 - 4 mm			
Number of printheads up to	1			
Maximum number of production lines	1			
Orientation	From left to right; From right to left			
Function	Top printing; Lateral printing			
Printable content	Text fields; BMP graphics	Text fields; BMP graphics; Time indication; Date field	Barcodes; Text fields; BMP graphics; Counter; Time indication; Date field; Date offset; Input of variables; Fields of action	Barcodes; 2D codes; Text fields; BMP graphics; Counter; Time indication; Date field; Date offset; Input of variables; Fields of action
Barcodes			Code 2 out of 5; Code 39; Code 128; EAN 8; EAN 13; UPC-A; UPC-E	Code 2 out of 5; Code 39; Code 128; DataMatrix; EAN 8; EAN 13; GS1 DataMatrix; QR code
DBPrint	–	–	–	+
PDF direct printing	+			
Software requirements	Windows 7, 8, 10; Processor with at least 1 GHz; Interface for connecting the printing device; PC mouse or touchscreen; DirectX 9 or higher with WDDM 1.0 driver; Min. 30 GB hard disk space; 2 GB for 32-bit or 4 GB for 64-bit			
Interpreter software	integra Command			
Spitting	+			

INK

Colour	Blue; Yellow; White; Red; Black; UV-visible; UV-curing; Green [1]
Composition	Solvent-based; Water-based

[1] A maximum of one ink per system can be used.

HARDWARE

	Print	Basic	Advanced	Pro
Display	no display			

MADE IN GERMANY

WEBER MARKING SYSTEMS

INDUSTRIAL INKJET PRINTER

MARKOPRINT X1JET HP STANDARD

HARDWARE

	Print	Basic	Advanced	Pro
External control panel/display	External Vivid Display; External HMI display			
Password protection	–	–	–	–
Internal sensor	+			
Sensor signal	NPN; Switching threshold 7V			
Shaft encoder signal	Frequency max.150 kHz; Switching threshold 7 V; 24 V voltage; Push-pull or NPN			
Status/ Alarm outputs	4	4	4	4
Flash memory expansion as an option	–			
USB memory stick slot	+			
SD memory card slot	–			
PCMCIA slot	–			
WIFI	–	–	–	–
interfaces	Ethernet (TCP/IP); RS-232; 15-pin SUB-D (connection shaft encoder/sensor/inputs and outputs and optional power supply)			

PHYSICAL ASPECTS

System dimensions (HxWxL)	95 x 75 x 119 mm
Weight	0.55 kg
IP ingress protection	IP 40
Authorisations	CE
Rel. humidity non-condensing	10 - 90 %
Ambient temperature	5 - 40°C
Supply voltage	100-230 V
Mains frequency	50-60 Hz
Amperage	1.25 A
Power consumption	15 W

INDUSTRIAL INKJET PRINTER

MARKOPRINT X1JET HP STANDARD

TECHNICAL DRAWINGS

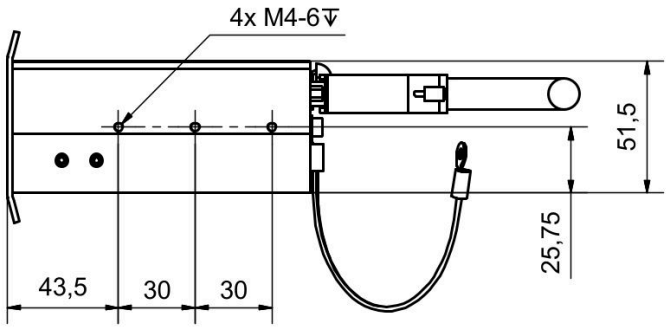

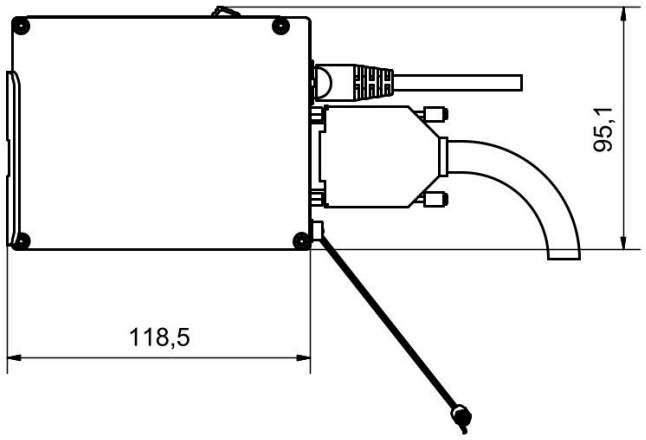

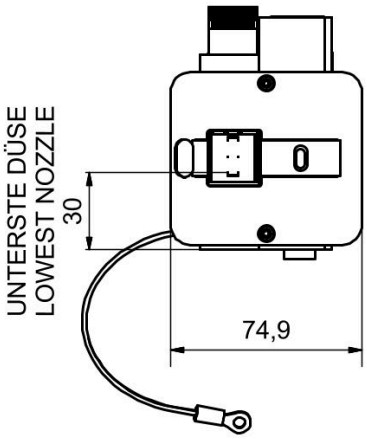

INDUSTRIAL INKJET PRINTER

MARKOPRINT X1JET HP STANDARD

ACCESSORIES



INTEGRA VIVID

The 7″ high-resolution HMI color touchscreen of integra Vivid provides a visual display of print jobs and the status of X1JET and PP Class printing systems. At a glance, you can see whether the printing system is operating, the cartridge ink levels, and the current print speed.
The innovative swipe-based UI makes editing printer settings and changing print jobs directly on the display especially easy.
With its IP52 rating, it is protected in dusty production environments and against dripping water.



HMI DISPLAY

The high-resolution OLED display visualizes functions and settings of the Markoprint inkjet printers of the X1JET series. Printer status, parameters, and print images can be checked and adjusted, and data can be entered directly. Start/stop buttons enable simple, intuitive operation and direct triggering of the print job.

Thanks to its compact, rugged design, the system can be integrated into production lines in a space-saving manner—either as a tabletop unit or via wall mounting. It is hot-plug capable and can be connected to other compatible systems during operation. Control is handled via an iLOGIK rotary knob; for print images with a variable field, the input mask appears automatically.

INDUSTRIAL INKJET PRINTER

MARKOPRINT X1JET HP STANDARD



YOUR RELIABLE PARTNER

+ PERSONAL POINT OF CONTACT
Your personal point of contact from our team will listen to you and explain the options.

+ MADE IN GERMANY
With our Made in Germany production, we guarantee quality and availability.

+ APPROPRIATE SOLUTION
We develop the optimal solution for your requirements, independently of technology.

+ SEAMLESS SERVICE
Our comprehensive service network is always on hand to help.

+ REGIONALLY ROOTED, GLOBALLY CONNECTED
As a family-owned company with branches worldwide, customer relations are always our top priority.

Weber Marking Systems GmbH

Maarweg 33 / 53619 Rheinbreitbach
T +49 (0)2224 77 08 0 / info@webermarking.de
weber-marking.com

2026-08-13 | en_INT

MADE IN GERMANY

WEBER MARKING SYSTEMS