INDUSTRIAL MARKING SYSTEMS

COUTH®

COUTH®

INDUSTRIAL MARKING SYSTEMS

COUTH®

INDUSTRIAL MARKING SYSTEMS

WHAT WOULD YOU LIKE TO MARK?

CONTENT

COUTH®

00
About us
04



01
Sectors
06



02
Materials
07



03
Dot peen marking
08

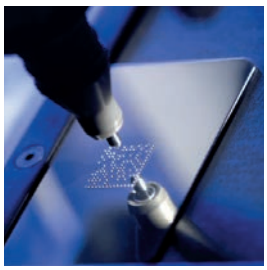

04
Scribe marking
18



05
COUTHsmartbox control units
24



06
Software
COUTHvector / **COUTH**edit
26



07
DATAMATRIX™ encoding
27

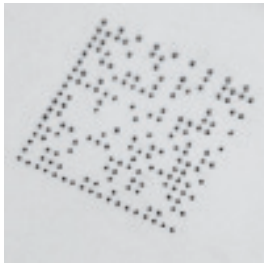

08
Options / Accessories
28

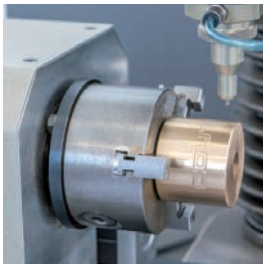

COUTH®

00

SPECIALISTS IN INDUSTRIAL MARKING

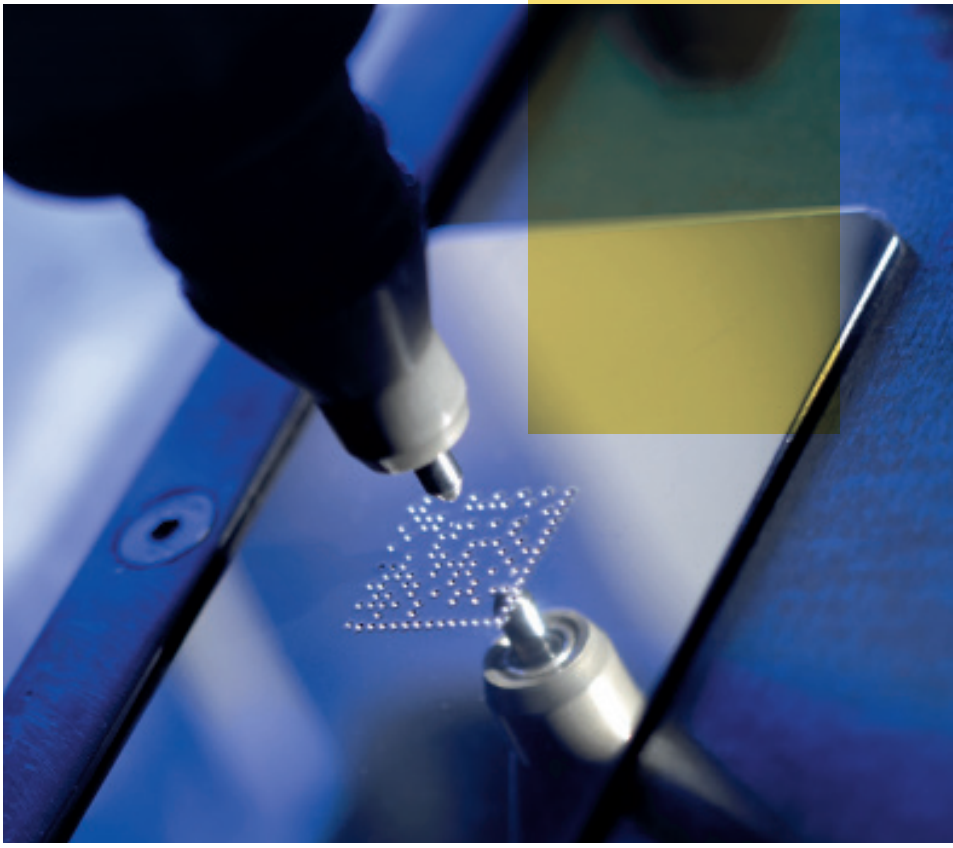

At **COUTH®**, we offer innovative, quality solutions based on constant contact with our customers and knowledge of their needs and expectations. We seek excellence in our processes and the generation of unique and innovative ideas that add value and facilitate their implementation.

The employees at **COUTH®** actively take responsibility for achieving its mission and vision. To this end, we work as a team and develop best practices, promoting transparency and ethical values in our environmentally-friendly ways of doing things.

CUSTOMIZED MARKING SOLUTIONS

Our product range includes different configurations for different marking surfaces and depths depending on the sector, material and/or application.

As specialists in marking technologies, we can design and manufacture special turnkey solutions based on the technical specifications and needs of each customer or user.

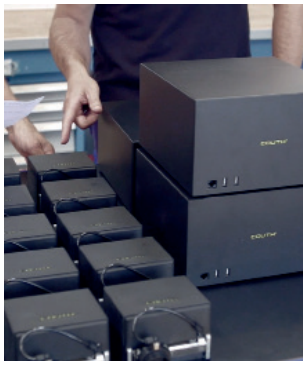

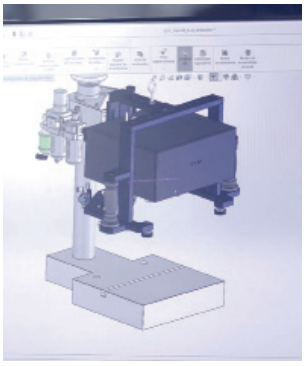



MARKED BY INNOVATION

At **COUTH®** we understand innovation as being more than just the product. It also encompasses service and processes in order to generate value for customers and users. We incorporate innovation as a general behaviour guideline and systematise the search for new opportunities based on our market knowledge and, in particular, the relationship with our customers.



A NEW GENERATION OF MARKING MACHINES



- GUARANTEE OF PRODUCTIVITY
- HIGH CONNECTIVITY
- USER - FRIENDLY
- SERVICE ORIENTATED
- CUSTOMIZED SOLUTIONS
- WORLDWIDE TECHNICAL SERVICE



MORE THAN 25,000 MACHINES OPERATING IN THE WORLD

66 COUNTRIES 5 CONTINENTS

COUTH®

01

SPECIALISED SOLUTIONS FOR EACH SECTOR

Since 1954, leading companies in the most demanding industrial sectors have trusted us to provide them with high quality solutions and products and functionality for industrial marking and traceability.

At **COUTH®** we are a leading specialist in industrial marking because we know that every sector has specific needs and, therefore, we adapt our wide range of solutions exactly to your requirements.

AUTOMOTIVE



We are specialised in offering different marking solutions for a large number of parts of a vehicle's structure.

RAILWAY



We offer customized solutions in the railway sector where deep marking is required due to the adverse conditions the materials have to withstand.

STEEL INDUSTRY

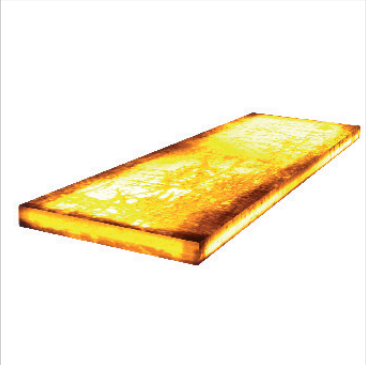

We offer the best marking technology for different applications in the steel sector, capable of withstanding subsequent treatment or machining and thus guaranteeing their identification and traceability.

OIL & GAS



We support the oil and gas sector by offering marking technology that allows identification and reading even after undergoing processes such as painting and surface treatments.

OTHERS



Thanks to our extensive experience, we are able to offer innovative marking solutions to the most advanced industrial sectors.

COUTH®

02

MARKING ALL KIND OF MATERIALS

The type of material and the further processing you receive directly influences the quality of the marking. Our wide experience, combined with our knowledge and ability to generate unique and innovative ideas, allows us to provide the most suitable solution for each case and guarantee optimum marking on all types of materials.

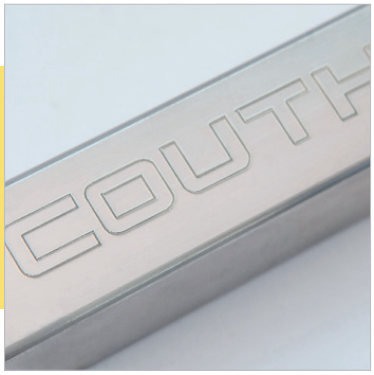



- STAINLESS STEEL.
- ALUMINIUM.
- TITANIUM.
- COPPER.
- PLASTICS.
- BRASS.
- WOOD.
- STEEL.
- ETC.

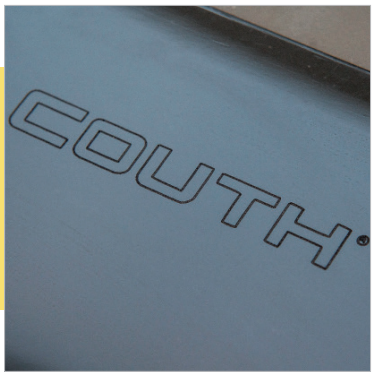



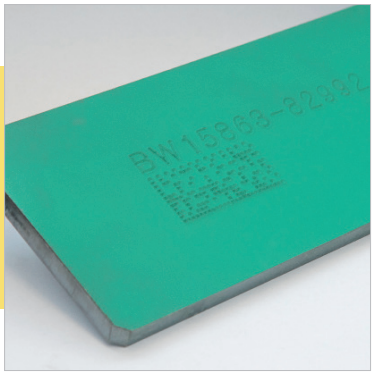

THE BEST RESULTS ON ANY MATERIAL OR SURFACE

DOT PEEN MARKING

- **INTEGRABLE**
- **PORTABLE**
- **BENCHTOP**
- **MIXED SYSTEM**

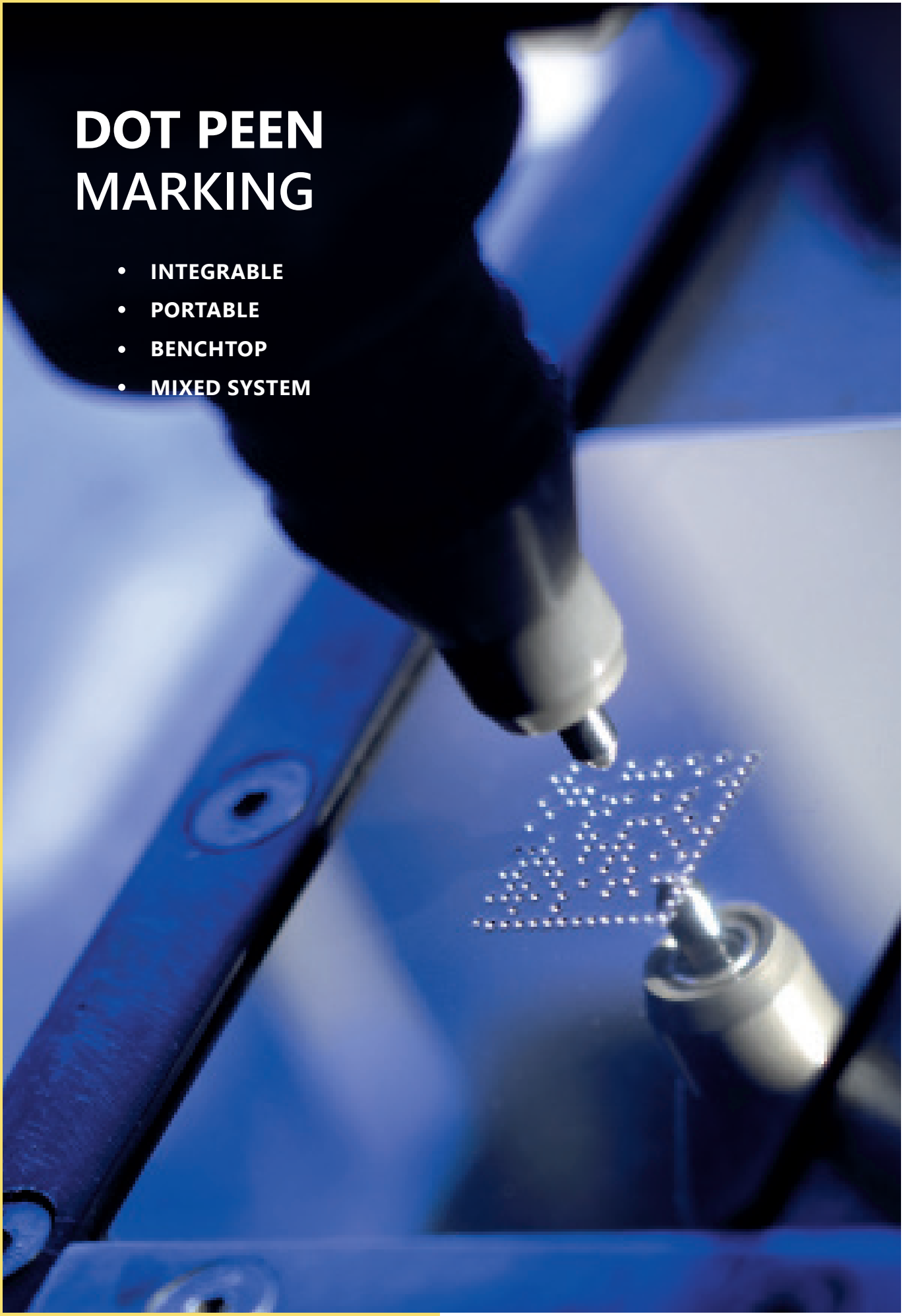

COUTH®

03

FAST, DEEP AND RELIABLE MARKING

The technology incorporated into the range of dot peen markers makes them the fastest on the market.

To these characteristics we must add the qualities of all **COUTH®** products, such as robustness and reliability, as a result of more than half century of experience in many sectors and applications.

At **COUTH®**, we are well aware that the marking unit is a fundamental element in production lines. That is why, on top of the quality of our products, we add exceptional customer service that is characterized by speed and available worldwide.

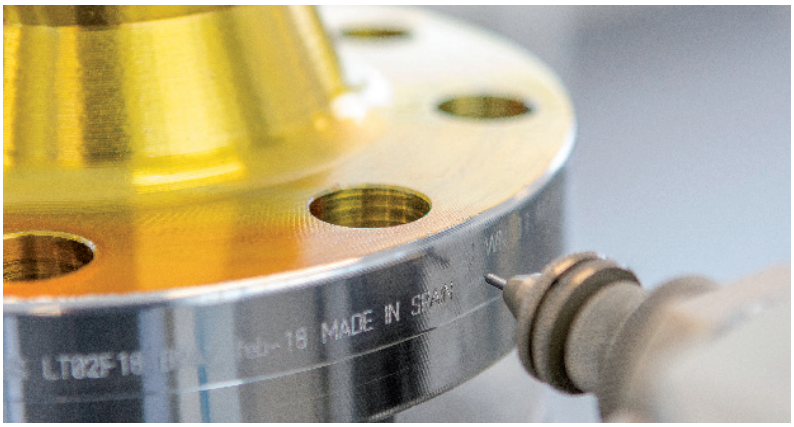



Portable



Integrable



Benchtop

GENERAL TECHNICAL CHARACTERISTICS

- Different marking areas.
- Speed of up to 12 characters/second.
- Variety of pneumatic and electric head types, depending on the needs of the application.
- Air pressure 6 bar.
- Connection to **COUTH**smartbox (See characteristics p.24).
- A wide range of characters from 1 to 48 mm. Emblems, logos, 2D codes (Datamatrix™codes, QR codes), etc.
- PC and tablet editing program.
- Reliable, robust and low maintenance.



DOT PEEN MARKING

INTEGRABLE

COUTH®



DOT 50x17 U

SUPERFAST

- Small model specially designed to be integrated into production lines.
- High speed marking on all types of materials and hardnesses up to 62 HRC.

STANDARD

- Model with a large marking area specially designed to be integrated into production lines.
- High precision and speed of marking on all types of materials and hardnesses up to 62 HRC.

DEEP MARKING

- Model with high mechanical strength, specially designed for deep marking. Compact and robust, very easy to integrate into production lines.
- High speed marking on all types of materials and hardnesses.



Model	Area	Dimensions (mm)			Weight	Type
	X / Y	Length	Width	Height	Kg	
DOT 50x17 U	50 x 17 (25)	112	79	173 (214)	1,7	Superfast
DOT 100x17 U	100 x 17 (25)	164,5	79	173 (214)	2,2	Superfast
DOT 160x17 U	160 x 17 (25)	222	79	173 (214)	2,7	Superfast
DOT 90x60 U	90 x 60	200	190	244	4,7	Standard
DOT 150x100 U	150 x 100	300	284	244	7,5	Standard
DOT 72x35 U	72 x 35	185	136	347	11	Deep marking
DOT 200x35 U	200 x 35	406	318	347	17	Deep marking

MARKING HEADS AVAILABLE

Type	Vibrating pneumatic					Solenoid	
Size	CH N7SB	CH N10SB	CH N14SB	CH N20SB	CH N34	CH S2	CH S6
Area X x Y							
50 x 17 (25)	●	●	●	●	–	●	○
100 x 17 (25)	●	●	●	●	–	●	○
160 x 17 (25)	●	●	●	●	–	●	○
90 x 60	●	●	●	●	●	–	●
150 x 100	●	●	●	●	●	–	●
72 x 35	●	●	●	●	●	–	–
200 x 35	●	●	●	●	●	–	–

● Available ○ Option only available for y=25 – Not available

* Pneumatics and solenoids are not interchangeable



DOT PEEN MARKING

INTEGRABLE

SUPERFAST

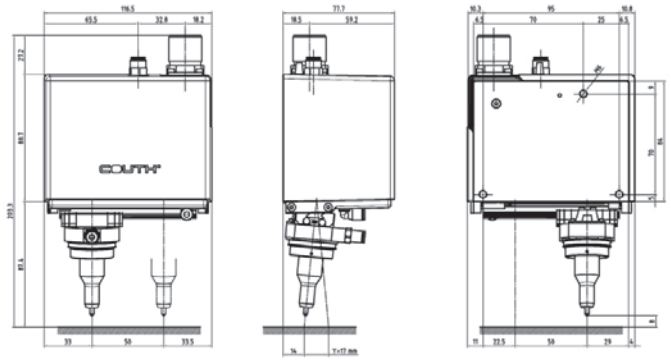

DOT 50x17 U



STANDARD

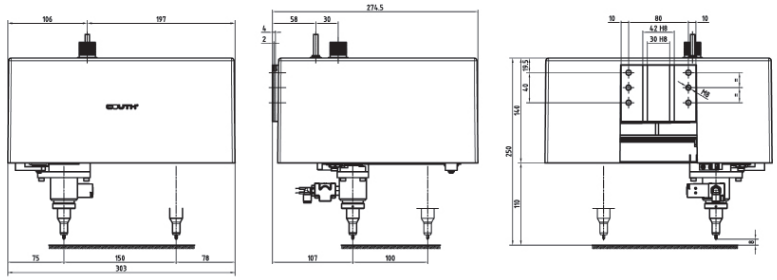

DOT 150x100 U



DEEP MARKING

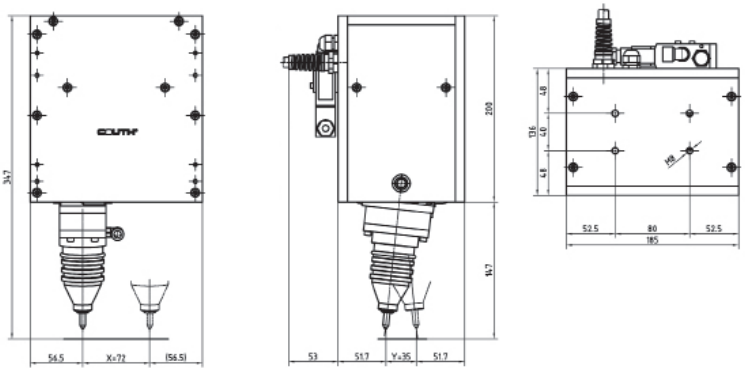

DOT 72x35 U



DEEP MARKING

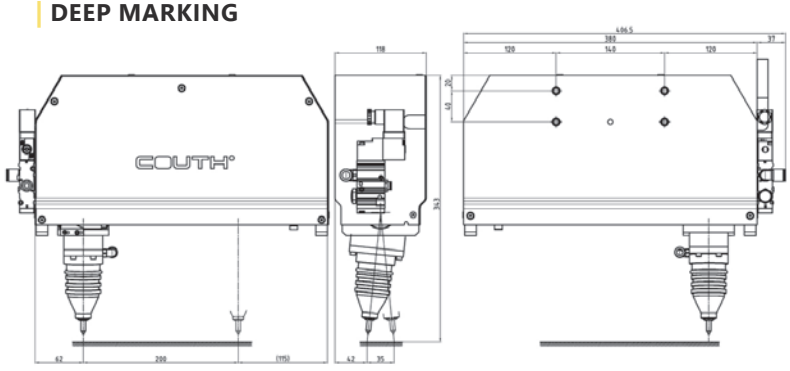

DOT 200x35 U





DOT PEEN MARKING

PORTABLE

COUTH®



DOT 50x17 P

SUPERFAST

- Small, lightweight model specially designed for easy and ergonomic use.
- High speed marking on all types of materials and hardnesses up to 62 HRC.

STANDARD

- Portable model with a large marking area and high mechanical rigidity, specially designed to mark directly on large parts.
- High precision and speed of marking on all types of materials and hardnesses up to 62 HR.

DEEP MARKING

- Model with high mechanical rigidity, specially designed for deep marking. Compact and robust, ideal for marking large parts “in situ”.
- Marking on all types of materials and hardnesses for their later treatment, painting, galvanising, etc.
- Reliable and low maintenance.



Model	Area	Dimensions (mm)			Weight	Type
	X / Y	Length	Width	Height	Kg	
DOT 50x17 P	50 x 17 (25)	146	198	174 (214)	2,8	Superfast
DOT 100x17 P	100 x 17 (25)	203	198	174 (214)	3,6	Superfast
DOT 160x17 P	160 x 17 (25)	257	204	260 (300)	4,6	Superfast
DOT 90x60 P	90 x 60	340	313	244	7	Standard
DOT 150x100 P	150 x 100	495	336	244	21	Standard
DOT 72x35 P	72 x 35	425	136	347	14	Deep marking
DOT 200x35 P	200 x 35	406	136,5	347	20	Deep marking

MARKING HEADS AVAILABLE

Type	Vibrating pneumatic					Solenoid	
Size	CH N7SB	CH N10SB	CH N14SB	CH N20SB	CH N34	CH S2	CH S6
Area X x Y							
50 x 17 (25)	●	●	●	●	–	●	○
100 x 17 (25)	●	●	●	●	–	●	○
160 x 17 (25)	●	●	●	●	–	●	○
90 x 60	●	●	●	●	●	–	●
150 x 100	●	●	●	●	●	–	●
72 x 35	●	●	●	●	●	–	–
200 x 35	●	●	●	●	●	–	–

● Available ○ Option only available for y=25 – Not available

* Pneumatics and solenoids are not interchangeable



DOT PEEN MARKING

PORTABLE

SUPERFAST

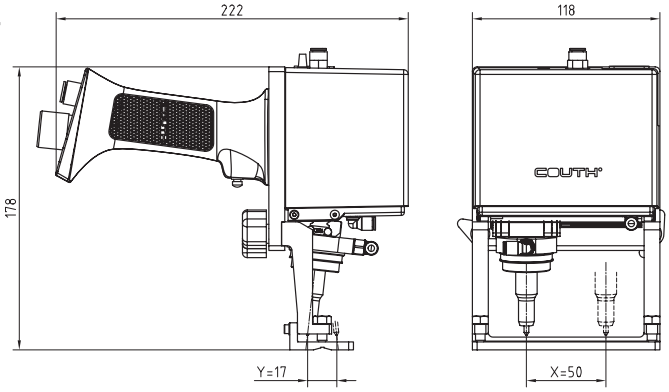



DOT 50x17 P

STANDARD

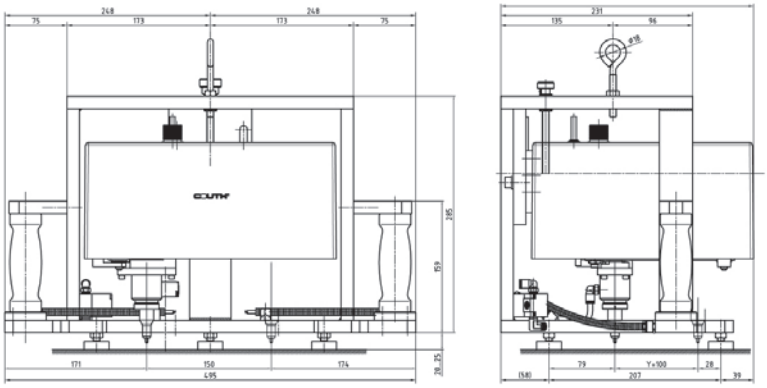



DOT 150x100 P

DEEP MARKING

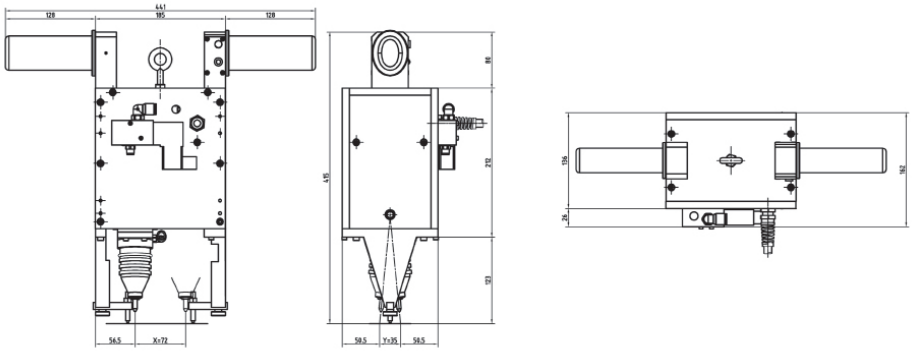



DOT 72x35 P

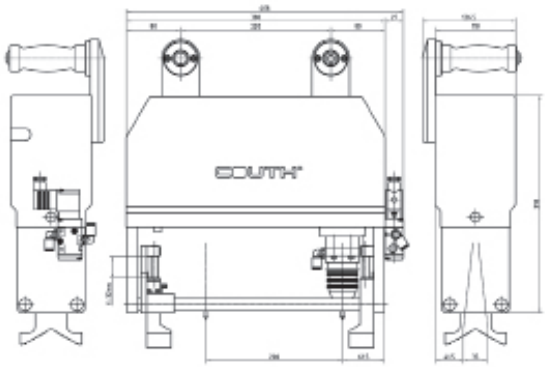



DOT 200x35 P



DOT PEEN MARKING

BENCHTOP

COUTH®



DOT 90x60 N

SUPERFAST

- Benchtop model with column support and marking table.
- High speed marking on all types of materials and hardnesses up to 62 HRC.

STANDARD

- Dekstop model supported on table and column, specially designed to be used in marking large areas.
- High precision and speed of marking on all types of materials and hardnesses up to 62 HRC.

DEEP MARKING

- Model with high mechanical rigidity, specially designed for deep marking. Compact and robust, very easy to integrate into production lines.
- High speed marking on all types of materials and hardnesses.

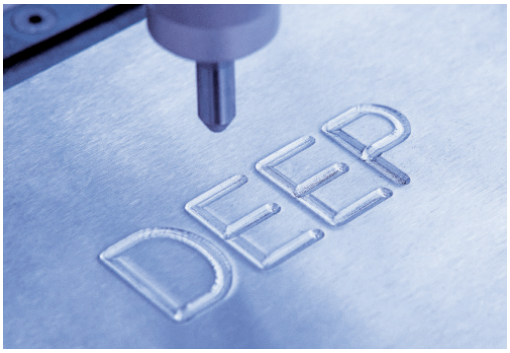

Model	Area	Dimensions (mm)			Weight	Type
	X / Y	Length	Width	Height	Kg	
DOT 50x17 N	50 x 17 (25)	200	370	660	28,5	Superfast
DOT 100x17 N	100 x 17 (25)	200	370	660	29	Superfast
DOT 160x17 N	160 x 17 (25)	200	370	660	29,5	Superfast
DOT 90x60 N	90 x 60	200	375	660	31,5	Standard
DOT 150x100 N	150 x 100	200	420	660	40,6	Standard
DOT 72x35 N	72 x 35	260	468	713	44,6	Deep marking
DOT 200x35 N	200 x 35	405	468	713	50,6	Deep marking

MARKING HEADS AVAILABLE

Type	Vibrating pneumatic					Solenoid	
Size	CH N7SB	CH N10SB	CH N14SB	CH N20SB	CH N34	CH S2	CH S6
Area X x Y							
50 x 17 (25)	●	●	●	●	-	●	○
100 x 17 (25)	●	●	●	●	-	●	○
160 x 17 (25)	●	●	●	●	-	●	○
90 x 60	●	●	●	●	●	-	●
150 x 100	●	●	●	●	●	-	●
72 x 35	●	●	●	●	●	-	-
200 x 35	●	●	●	●	●	-	-

● Available ○ Option only available for y=25 - Not available

* Pneumatics and solenoids are not interchangeable



DOT PEEN MARKING

BENCHTOP

SUPERFAST

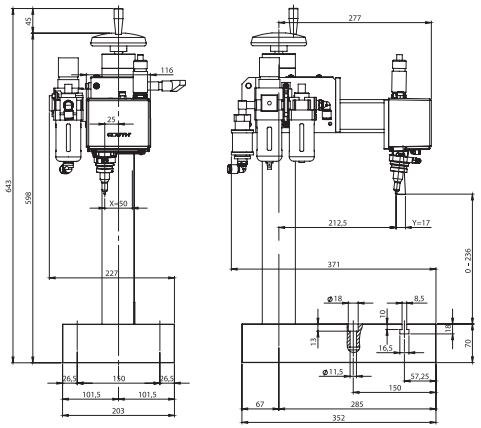



DOT 50x17 N

STANDARD

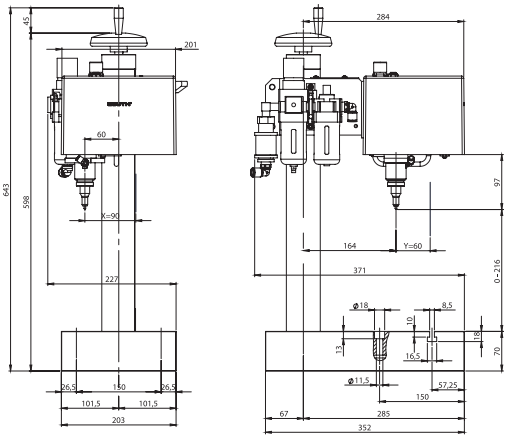



DOT 90x60 N

DEEP MARKING

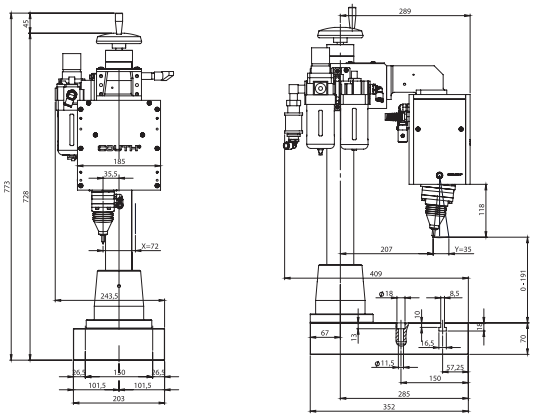



DOT 72x35 N

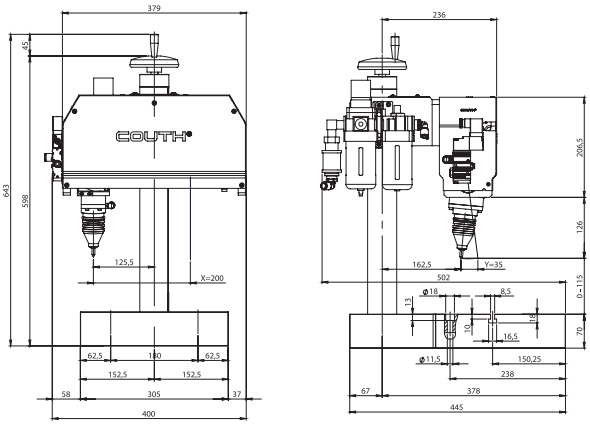



DOT 200x35 N



DOT PEEN MARKING

MIXED SYSTEM

COUTH®



DOT 50x17 P+N

SUPERFAST

- Versatile model, which is also portable. Stands out for its ergonomics and usability.
- High speed marking on all types of materials and hardnesses up to 62 HRC.

STANDARD

- Mixed Benchtop and portable model, with column support and table for marking any kinds of part.
- Versatile model that stands out for its ergonomics and usability.
- High speed marking on all types of materials and hardnesses up to 62 HRC.

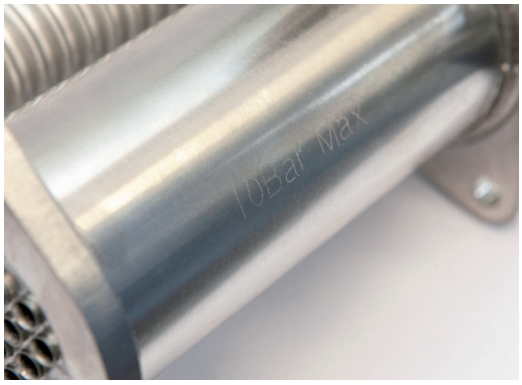

Model	Area	Dimensions (mm)			Weight	Type
	X / Y	Length	Width	Height	Kg	
DOT 50x17 P+N	50 x 17 (25)	200	370	660	31,5	Superfast
DOT 100x17 P+N	100 x 17 (25)	200	370	660	32,5	Superfast
DOT 160x17 P+N	160 x 17 (25)	203	375	660	33,5	Superfast
DOT 90x60 P+N	90 x 60	200	375	660	35	Standard

MARKING HEADS AVAILABLE

Type	Vibrating pneumatic					Solenoid	
Size	CH N7SB	CH N10SB	CH N14SB	CH N20SB	CH N34	CH S02	CH S06
Area X x Y							
50 x 17 (25)	●	●	●	●	–	●	○
100 x 17 (25)	●	●	●	●	–	●	○
160 x 17 (25)	●	●	●	●	–	●	○
90 x 60	●	●	●	●	●	–	●

● Available ○ Option only available for y=25 – Not available

* Pneumatics and solenoids are not interchangeable



DOT PEEN MARKING

MIXED SYSTEM

COUTH®

SUPERFAST

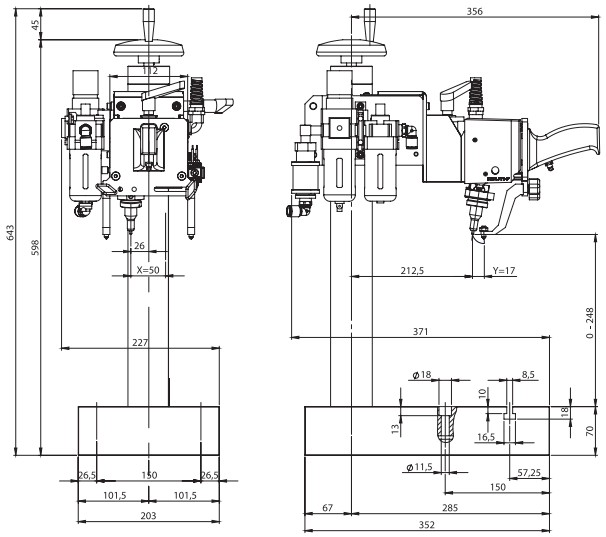



DOT 50x17 P+N

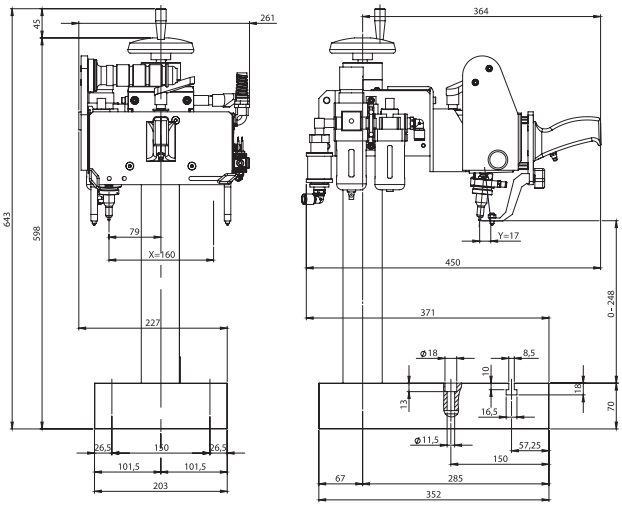



DOT 160x17 P+N

STANDARD

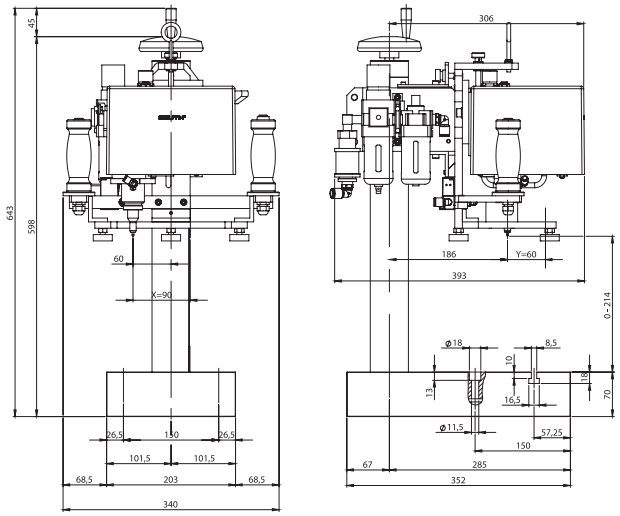



DOT 90x60 P+N

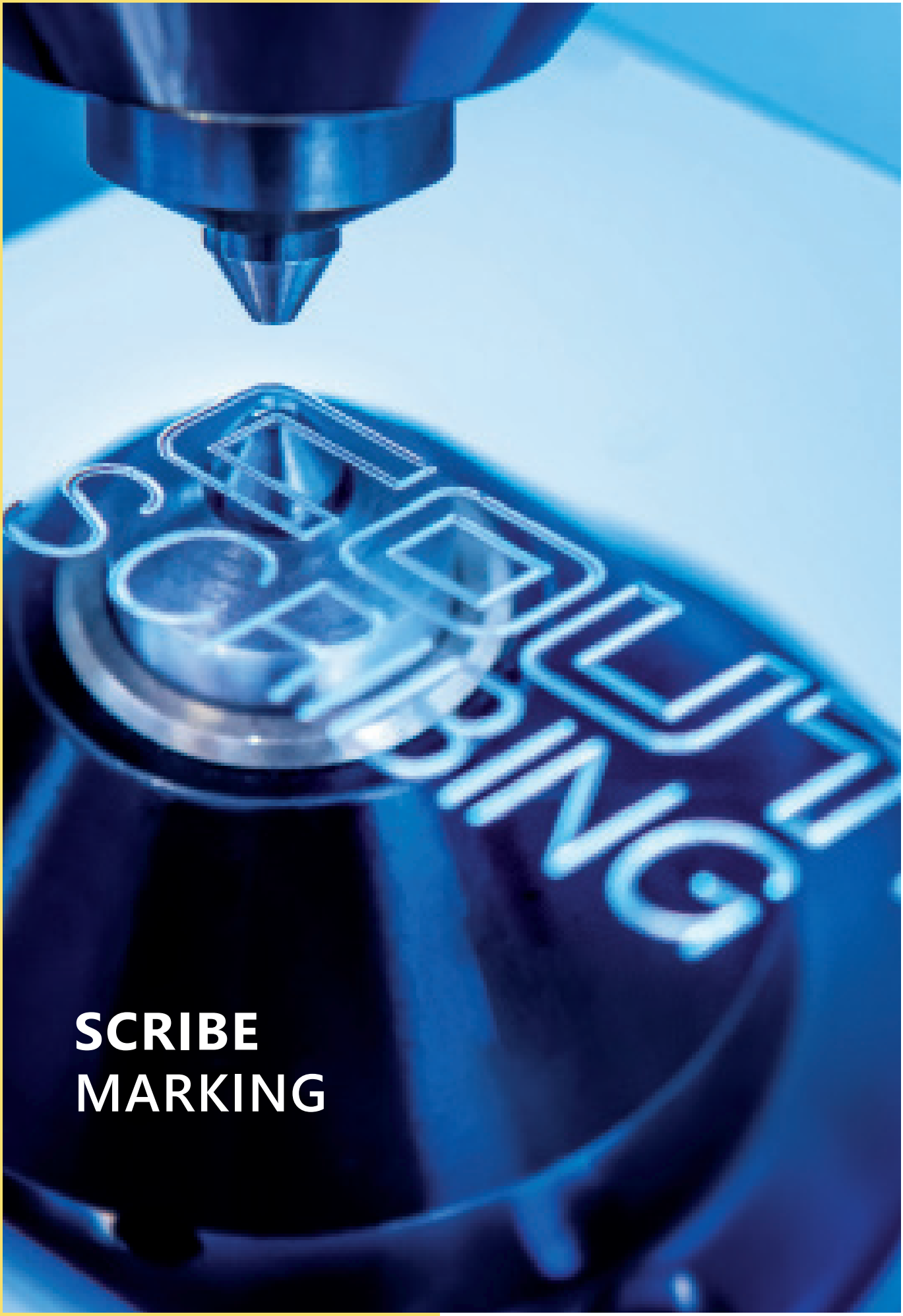

SCRIBE MARKING

COUTH®

04

COMPACT, ROBUST, QUIET MARKING

When noiseless marking is a necessity, scribe marking is the ideal technology.

Add to this the compact, robust and reliable design and you have a range of fine, elegant, sharp and deep marking.

The optimum communication between the marker and the electronic control / PLC makes them easy to integrate into our customers' computer systems. And, of course, this is all without sacrificing the ease of use, versatility and service excellence that characterise **COUTH®**.





Integrable



Integrable

GENERAL TECHNICAL CHARACTERISTICS

- Different marking areas.
- High speed scribe marking.
- Maximum depths up to 0.5 mm.
- Quick needle change system.
- Air pressure up to 6 bar.
- 2.5m robotics cable (tailor-made lengths available).
- Connection to **COUTH**smartbox control (See characteristics p.24).
- Wide range of characters from 1 to 48 mm. Emblems, logos, 2D codes (Datamatrix™ codes, QR codes), etc.
- PC and tablet editing program.
- Reliable, robust and low maintenance.



SCRIBE MARKING

INTEGRABLE



SCRIBE 50x30 U

SUPERFAST

- Small model specially designed to be integrated into production lines.
- High speed, silent and high quality marking for all types of materials.

STANDARD

- Solid, compact model specially designed to be integrated into production lines.
- Optimum marking depth and quality for different types of materials and industrial applications.

SERVOMOTOR

- Solid, compact model specially designed to be integrated into production lines where really deep marking is requireds.
- High speed and reliability of marking, silent, high quality and depth in all types of materials.

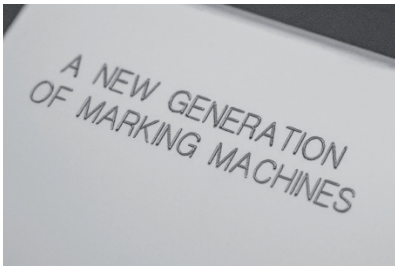

Model	Area	Dimensions (mm)			Weight	Depth	Type
	X x Y	Length	Width	Height	Kg	Maximum	
SCRIBE 75x15 U	75 x 15	165	79	170	3,8	0,05 mm	Superfast
SCRIBE 60x40 U	60 x 40	155,5	127	189	6	0,15 mm	Standard
SCRIBE 50x30 U	50 x 30	163	150	264,5	10	0,2 mm	Standard
SCRIBE 50x30 U	50 x 30	153	155	237	10	0,3 mm	Servomotor
SCRIBE 80x80 U	80 x 80	205	200	208	8,5	0,2 mm	Standard
SCRIBE 120x40 U	120 x 40	285	188,5	245	14	0,4 mm	Servomotor
SCRIBE 180x45 U	180 x 45	420	193	330,5	26	0,5 mm	Servomotor

MARKING HEADS AVAILABLE

Tipo	Pneumatic					
Size	R14	R20	R40B	R40C	R50	R63
Area X x Y						
75 x 15	●	-	-	-	-	-
60 x 40	-	●	-	-	-	-
50 x 30	-	●	●	●	-	-
50 x 30	-	●	●	●	-	-
80 x 80	-	-	●	-	-	-
120 x 40	-	-	-	-	●	-
180 x 45	-	-	-	-	-	●

● Available - Not available

* Pneumatics and solenoids are not interchangeable



SCRIBE MARKING

INTEGRABLE

SUPERFAST

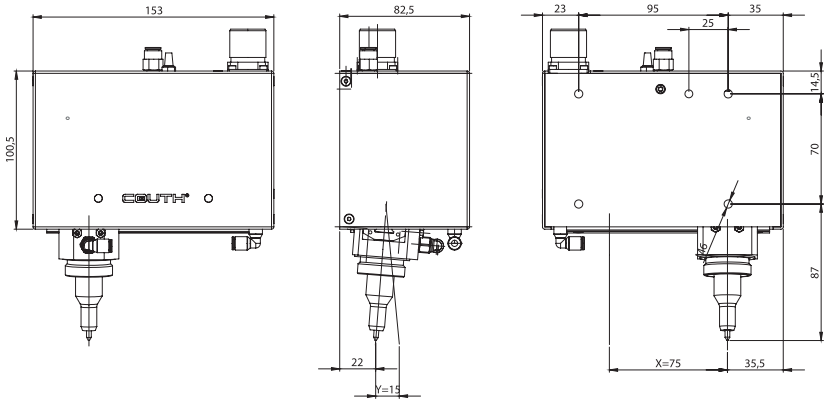



SCRIBE 75x15 U

STANDARD

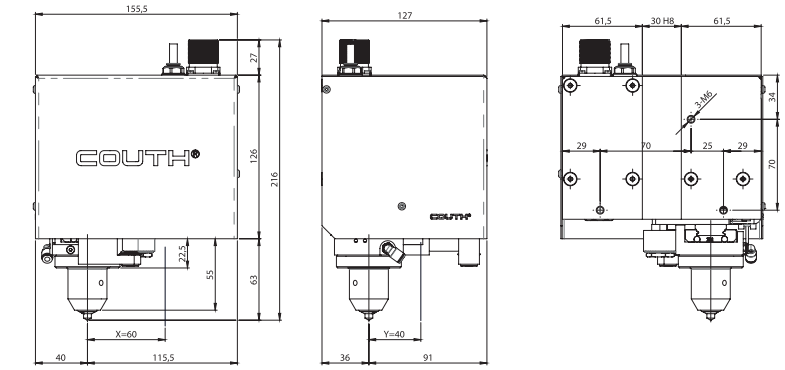



SCRIBE 60x40 U

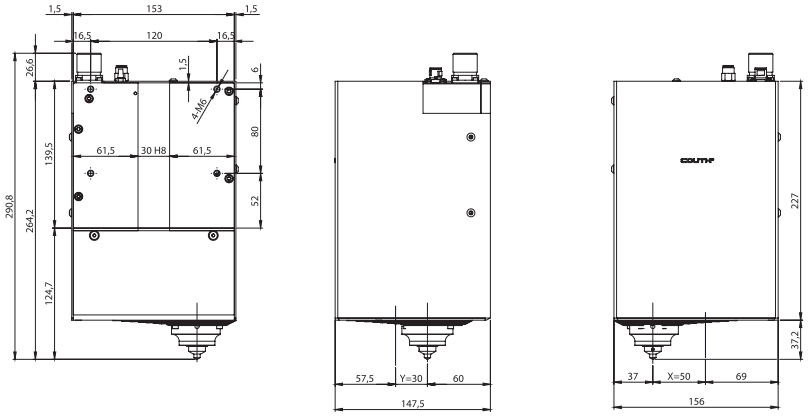



SCRIBE 50x30 U

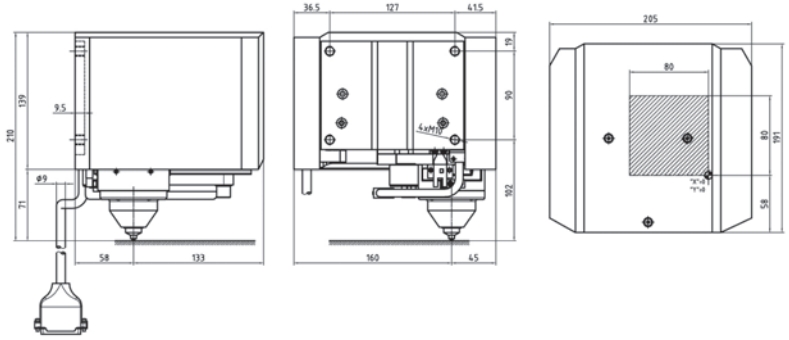



SCRIBE 80x80 U



SCRIBE MARKING

INTEGRABLE

SERVOMOTOR

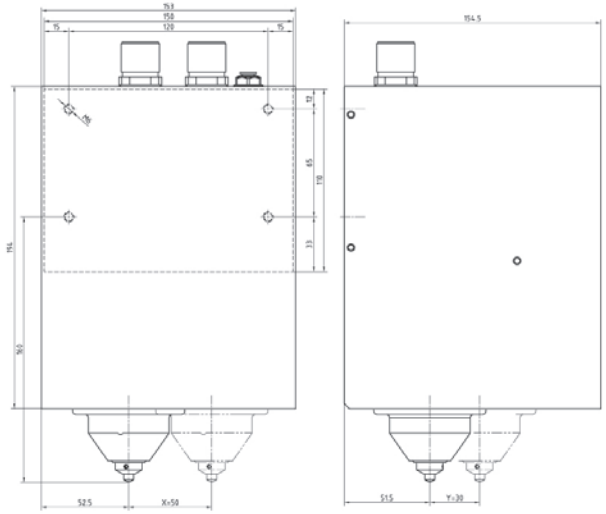

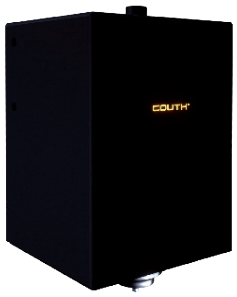

SCRIBE 50x30 U

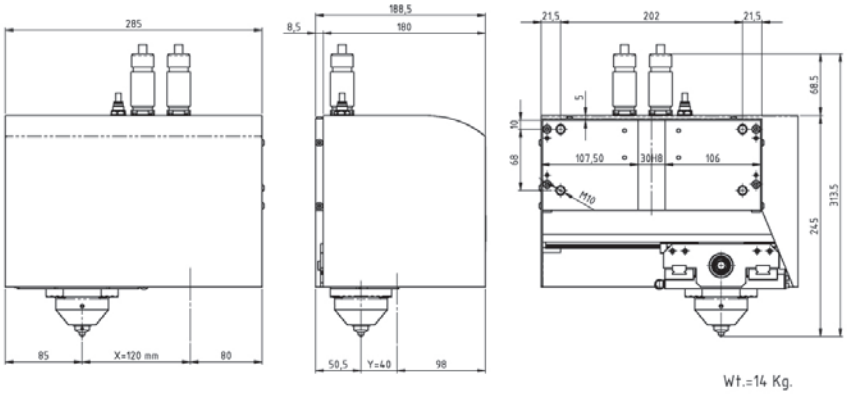

Wt.=14 Kg.



SCRIBE 120x40 U

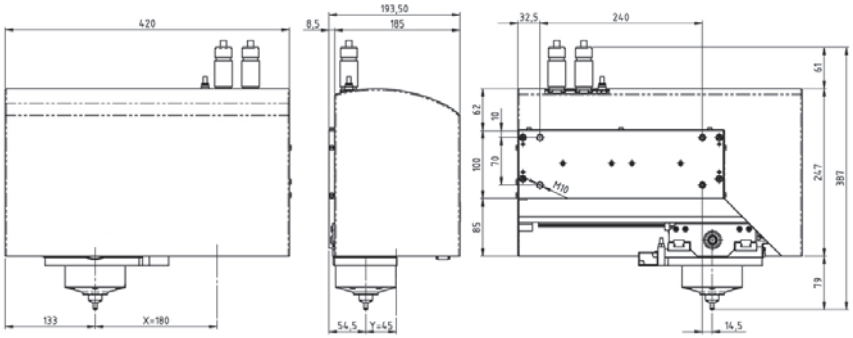

Wt.=24.5 Kg



SCRIBE 180x45 U


SCRIBE

COUTHsmartbox MARKING UNDER CONTROL

Modular control unit, to intregrate with **COUTH®** dot peen and scribing marking units.



| **COUTH**smartbox

HMI

User interface, optional, interchangeable and removeable.

Available in:

- Keypad, 7" colour screen and built-in keypad.
- Touchscreen 10" colour touchscreen.

With just one HMI, you may manage multiple **COUTH smartbox**es.



| **COUTH**smartbox + HMI



| HMI 7" screen and built-in keypad



| HMI 10" touchscreen

| ADVANTAGES

- **Increased power for COUTH®** marking units, in 15-20%, providing for greater marking depth and/or speed, thanks to more advanced electronics.
- **Autonomous control system**, does not require PC for operation.
- Connection **available for main industrial field buses** (Profibus, Profinet, Ethernet/IP, etc.).
- **Remote access for technical assistance**.
- Reception of **diagnostics** in PLCs made by the **COUTHsmartbox** control unit.
- **Removable and interchangeable screen**, easy to place.
- **Colour user interface, more intuitive**.

COUTH®

COUTHsmartbox CHARACTERISTICS

- Adjustable speed and marking depth.
- 11 input and 7 output programmable signals for connection to PLC.
- Straight line, inclined surface, arc and mirror marking.
- Marking of consecutive numbers and repetitions, shifts, time, date, week, etc.
- Marking of logos and special characters from vector, DWG and PLT/HPGL files.
- Marking of square and rectangular DATAMATRIX™ codes and QR codes.
- Possibility to use and create any font requested by the customer.
- Adjustable character compression, expansion and spacing, italics and marking density.
- Files of 40 lines, with 75 characters per line.
- Possibility to store up to 10,000 marking files.
- Allows the slave mode operation of a PC or PLC.
- RS 232 serial connection and Ethernet integrated. Available: Profibus, Profinet and Ethernet / IP.
- Possibility of external connection of keyboard, mouse and USB.
- Option to connect machines with encoders combined to their motors.
- Possibility to connect barcode and DATAMATRIX™ readers.
- Possibility to connect plate feeder, swivel devices, jog systems, etc.
- Multi-language screen.
- Power supply: 110/220V; 50/60Hz.
- Front panel option for standard 19" rack dimensions.
- European CE and UL standards.

COUTHlink

Software developed by **COUTH®** to facilitate communication between PLC and the **COUTH®** marking control unit.

COUTHlink is built into the **COUTHsmartbox** control.

START-UP IN 10 MIN.



- Start-up in approximately 10 minutes.
- Significant savings on hours invested in programming.
- Simple **DRAG&DROP** to access mark settings.
- Facilitates the interaction with the controller of the marking unit and the different PLC brand on the market: SIEMENS, ALLEN BRADLEY, OMRON, etc.
- Own functions on the PLC platform with the **COUTH®** protocol.
- Includes a library package for different PLC programming platforms.

SOFTWARE

COUTHvector

The **COUTH**vector logo generation program specifically designed by **COUTH®** allows you to take full advantage of the vector-defined marking system.

This software allows the user to quickly and easily generate their own logos and then send them from the PC to the control unit, remaining in the memory of the control unit for future use.

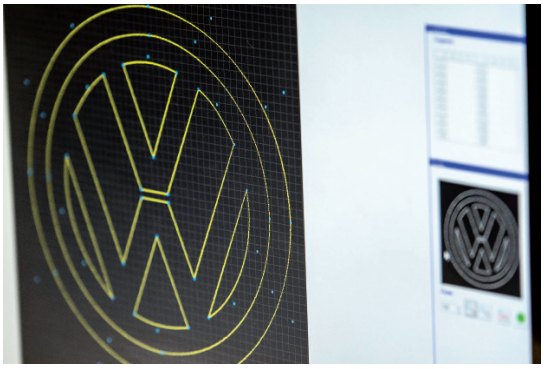



COUTHedit

COUTHedit is the graphic tool for creating and editing marking files for the **COUTH®** control unit.

It allows the user quickly and easily to generate their own marking files and send them from the PC to the control unit, remaining stored in the memory of the control unit for future use.

It is possible to carry out marking from these files from the application itself, by importing the marking data from a database or entering them manually. It is also possible to modify different general parameters in the control unit and manage the contents of its internal memory.

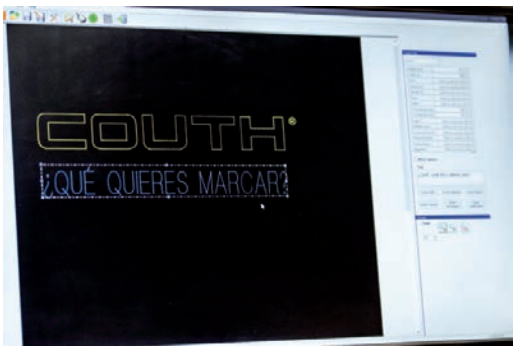

DATAMATRIX™ ENCODING

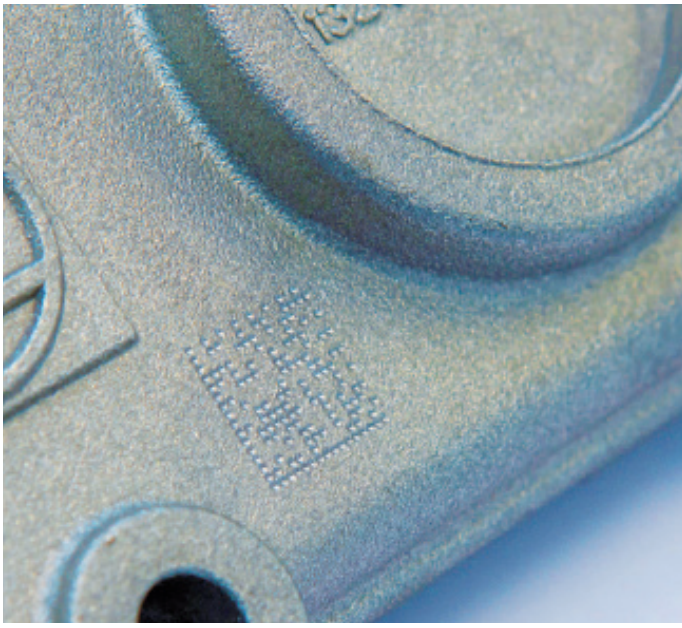

In accordance with the latest traceability standards to identify and record the trail of each product unit from its creation to the end of the market chain, the new **COUTH**smartbox control unit makes DATAMATRIX™ code marking possible for any machine version and model.

COUTH® has marking units with precise definitions, as well as marking heads with both electromagnetic and pneumatic impact actuation, capable of carrying out any depth of mark for 2D DATAMATRIX™ coding.





CHARACTERISTICS

- Possibility of using a square or rectangular matrix.
- Storage of 1 to 3116 numeric characters or 2335 alphanumeric characters.
- Reed-Solomon error correction with data redundancy.
- The dot peening marking system is ideal for marking DATAMATRIX™ codes on metals, wood, plastic, etc.

The most common application is to mark codes in tight spaces. The code is read by a CCD device on a video camera.

As it is an infinitely scalable symbol, it can be read at any distance with a suitable combination of matrix size and reading device.

OPTIONS / ACCESSORIES

08

Rotary device for marking cylindrical parts.

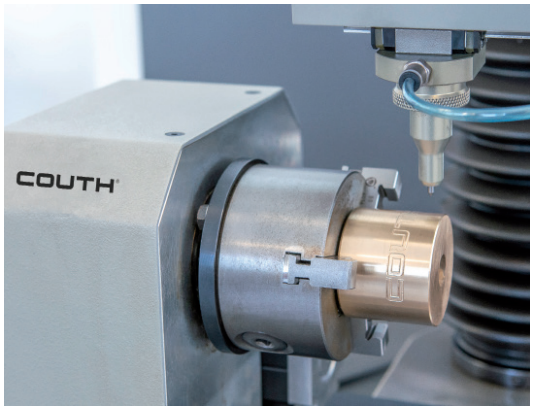

Plate feeder.





Plate protection system.

Plate holder tool.



OTHER OPTIONS/ACCESSORIES

- MOTORISED COLUMN.
- SOFT COVER PROTECTION SYSTEM.
- PNEUMATIC APPROACHING SYSTEM.
- ETC.

COUTH®

INDUSTRIAL MARKING SYSTEMS

COUTH®

INDUSTRIAL MARKING SYSTEMS

09-19-USA

COUTH®
Zikuñaga 48, Hernani
Gipuzkoa · Spain
T.: +34 943 556 412
couth@couth.com

www.couth.com